Description of Materials

Resident unit trim

white Gerber 21-912, elongated bowl toilet with Bemis 1500 elongated seat
white Toto CST244, 17" high, ADA elongated toilet or equal w/Bemis 1500 elongated seat
white Toto LT221 undercounter lav w/Grohe 34-270.001 chrome faucet
white Aquatic 2603SMTE, fiberglass tub/shower stall w/Delta R10000MF/T14459 chrome
white Fiberfab 48BFFWA fiberglass shower stall w/removable threshold w/Delta R10000MF/T14259 chrome
Delta chrome hand held shower at type A units
Lenova LS18304 undercounter stainless steel kitchen sink w/Grohe 32-665.001 chrome faucet
Elkay ELUHAD2115-5 undercounter stainless steel sink w/ Grohe 32-665.001 chrome (at ADA units only)

Amenity/retail restrooms, lobby sink

white Toto CST244, ADA elongated toilet w/Bemis 1955 open front seat
white Toto LT221 undercounter china lav w/Grohe 34.270.001 chrome faucet
Lenova PC-SS-ORI-S15 undercounter stainless steel bar sink w/Grohe 32-665.001 chrome faucet

VITREOUS CHINA

TOILET
21-912

MAXWELL® 1.28 Elongated Toilet

12″ Rough-in

Features:

- 1.28 gpf/4.8 Lpf high efficiency two-piece toilet
- Elongated bowl
- Dual-fed siphon jet
- Pilot fill valve
- 3″ flush valve
- 2″ glazed trapway
- Color matched front tank lever (white only)
- Optional insulated non-sweating tank
- Optional right-handed trip lever
- Available in White, Bone and Biscuit
- 2 bolt caps

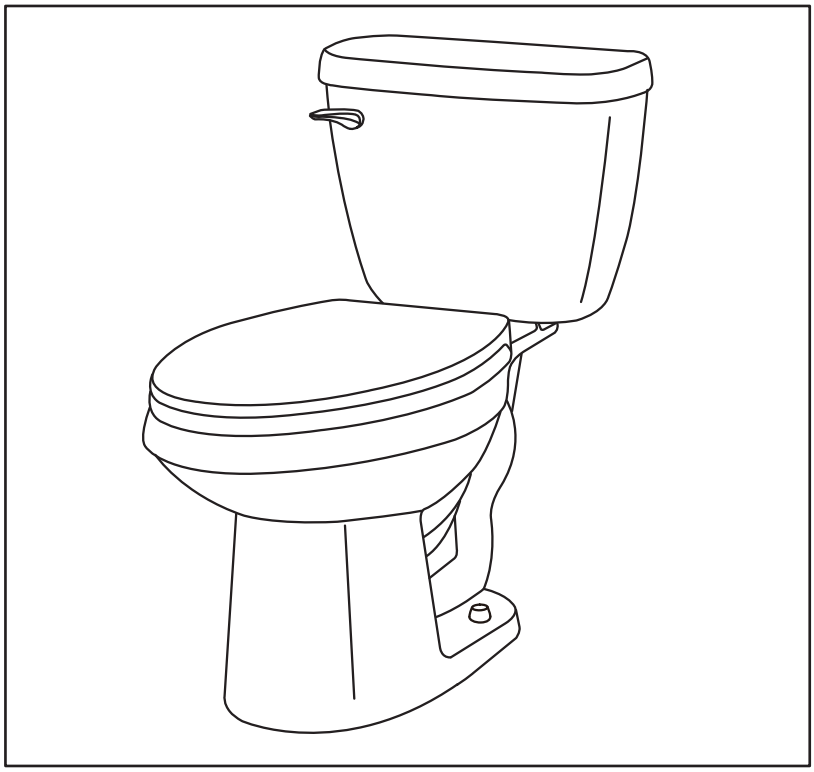

Specifications: *Bowl*—#21-962 Elongated Bowl *Tank*—#28-990
Seat not included

Dimensions:

Height	28″
Width	17 1/2″
Depth	28 1/8″
Rough-in	12″
Water Surface from Rim	5 7/8″
Trapway	2″
Water Surface	10 7/8″ x 7 1/2″
Water Seal	2 3/8″
Shipping Weight	79.5 lbs

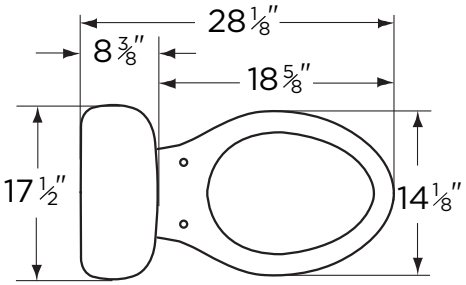

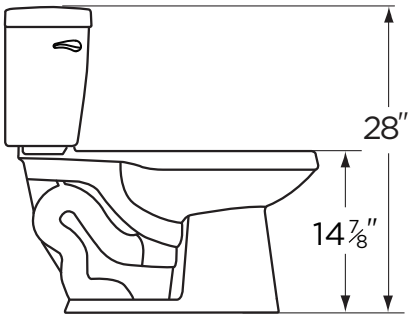

THIS FIXTURE QUALIFIES ACCORDING TO ASME TEST PROCEDURES AS A HIGH EFFICIENCY WATER CLOSET WITH AN AVERAGE CONSUMPTION OF 1.28 gpf (4.8 Lpf) OR LESS.

HIGH EFFICIENCY TOILET
HET

Job Name	
Date	
Model Specified	
Quantity	
Customer	
Contractor	
Architect/engineer	

www.gerberonline.com

Because we are committed to continual product improvement, specifications are subject to change without notice.

1.28 gpf (4.8 Lpf) MAXWELL® 1.28 TOILET

21-912
Elongated, 12″ Rough-in
(Bowl 21-962 with Tank 28-990)

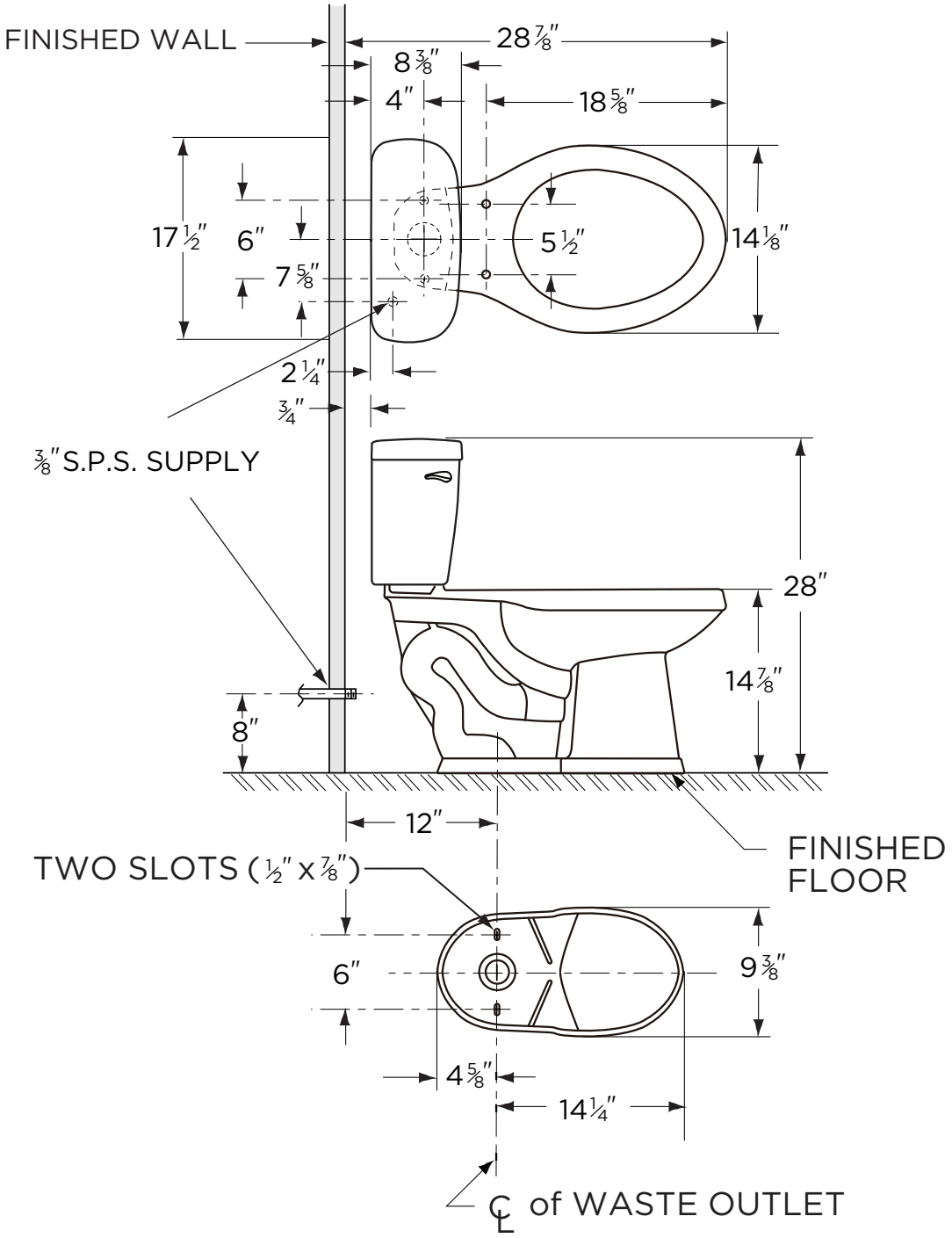

NOTES:
All dimensions are in inches.

Illustrations may not be drawn to scale.

IMPORTANT:
Dimensions of fixtures are nominal and may vary within the range of tolerances established by ASME Standard A 112.19.2.

THIS FIXTURE QUALIFIES ACCORDING TO ASME TEST PROCEDURES AS A HIGH EFFICIENCY WATER CLOSET WITH AN AVERAGE CONSUMPTION OF 1.28 gpf (4.8 Lpf) OR LESS.

RESIDENTIAL MOLDED WOOD TOILET SEAT

MODEL #	COLOR #
1500EC	WHITE

DESCRIPTION:

Closed front with cover, elongated, molded wood, multi-coat enamel finish toilet seat. Features two color-matched bumpers, color-matched Easy•Clean & Change® hinges with non-corrosive, top-tightening bolts and wing nuts.

SPECIFICATIONS:

Size:	Elongated
Material:	Molded Wood
Style:	Closed Front with Cover
Bumpers:	Two
Hinges:	Plastic Easy•Clean & Change®
Fastening System:	Non-Corrosive Bolts and Wing Nuts

FEATURES:

Easy•Clean & Change®

Non-Corrosive Bolts and Wing Nuts

PLASTIC EASY•CLEAN & CHANGE® HINGES

TWIST HINGES TO UNLOCK

EASY REMOVAL OF SEAT FOR THOROUGH CLEANING

NON-CORROSIVE BOLTS AND WING NUTS

DIMENSIONS:

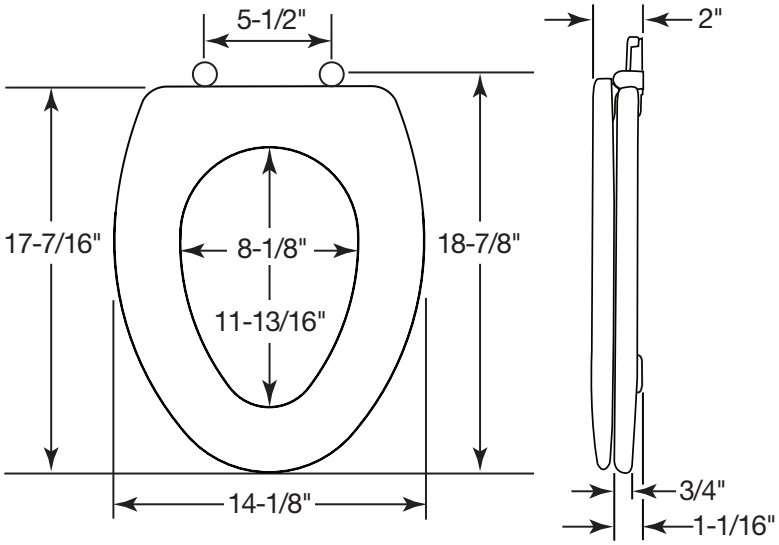

Proudly Made in the USA

Bemis Manufacturing Co., Sheboygan Falls, WI 53085
www.ToiletSeats.com

Phone: 800-558-7651 Fax: 800-292-3647

TOTO®

CST244EF

Entrada™ Close Coupled Toilet, 1.28GPF

FEATURES

- E-Max flushing system, high efficiency (1.28GPF/4.8LPF)
- Elongated bowl
- Universal Height
- ADA compliant
- Close coupled, elongated front bowl and tank set, less toilet seat
- Chrome trip lever
- 12" Rough-in

MODELS

- CST244EF

COMPONENTS

- C244EF - Elongated Front Bowl
- ST243E - Tank and Cover only

- SS114 SoftClose® seat (sold separately)

COLORS/FINISHES

- Standard
  #01 Cotton

PRODUCT SPECIFICATION

The two-piece, universal height, high efficiency E-Max flushing system toilet shall be 1.28GPF. Toilet shall have high-profile tank, elongated bowl and chrome trip lever. Toilet shall be ADA compliant and universal height. Toilet shall be TOTO Model CST244EF____.

E-MAX™ FLUSHING SYSTEM BY TOTO®

CODES/STANDARDS

- Meets and exceeds ASME A112.19.2/CSA B45.1
- Certifications: IAPMO(cUPC)
- Code compliance: UPC, IPC, NSPC, NPC Canada, and others
- ADA compliant (when installed with trip lever located on the approach side)

CST244EF

Entrada™ Close Coupled Toilet, 1.28GPF

SPECIFICATIONS

- Water Use — 1.28 GPF (4.8 LPF)
- Flush System — E-Max
- Min. Water Pressure — 8 psi (flowing)
- Water Surface — 8-3/8" x 10-1/2"
- Trap Diameter — 2-1/8"
- Rough-in — 12"
- Trap Seal — 2-3/8"
- Warranty — One Year Limited Warranty
- Material — Vitreous china
- Shipping Weight — C244EF - 53lbs
  ST243E - 24lbs
- Shipping Dimensions — C244EF - 28-1/2" x 16" W1 x 10-1/4" W2 x 17-3/4"

  ST243E - 16-1/2" x 8-1/4" x 15-3/4"

INSTALLATION NOTES

Back-to-Back Toilet Installations:
TOTO recommends the use of a nationally listed, double sanitary tee-wye only, in vertical waste stacks, in accordance with the stipulations noted in the majority of nationally recognized plumbing codes.

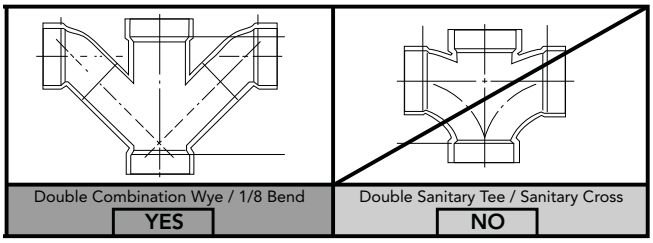

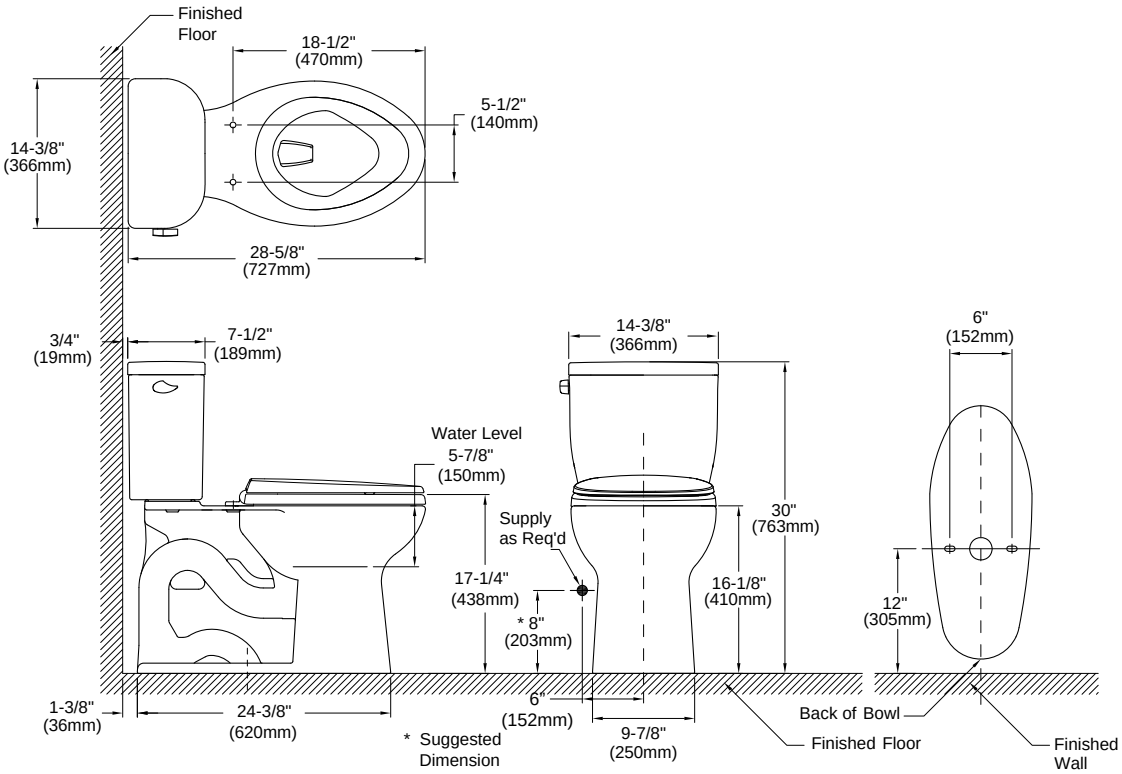

TOTO®

These dimensions and specifications are subject to change without notice

Ph: (888) 295-8134 | Fax: (800) 699-4889 | www.totousa.com

SS-00636 V.03

Printed in U.S.A. | © TOTO USA 02/13 | Printed on recycled paper ♻

RESIDENTIAL MOLDED WOOD TOILET SEAT

MODEL #	COLOR #
1500EC	WHITE

DESCRIPTION:

Closed front with cover, elongated, molded wood, multi-coat enamel finish toilet seat. Features two color-matched bumpers, color-matched Easy•Clean & Change® hinges with non-corrosive, top-tightening bolts and wing nuts.

SPECIFICATIONS:

Size:	Elongated
Material:	Molded Wood
Style:	Closed Front with Cover
Bumpers:	Two
Hinges:	Plastic Easy•Clean & Change®
Fastening System:	Non-Corrosive Bolts and Wing Nuts

FEATURES:

Easy•Clean & Change®

Non-Corrosive Bolts and Wing Nuts

PLASTIC EASY•CLEAN & CHANGE® HINGES

TWIST HINGES TO UNLOCK

EASY REMOVAL OF SEAT FOR THOROUGH CLEANING

NON-CORROSIVE BOLTS AND WING NUTS

DIMENSIONS:

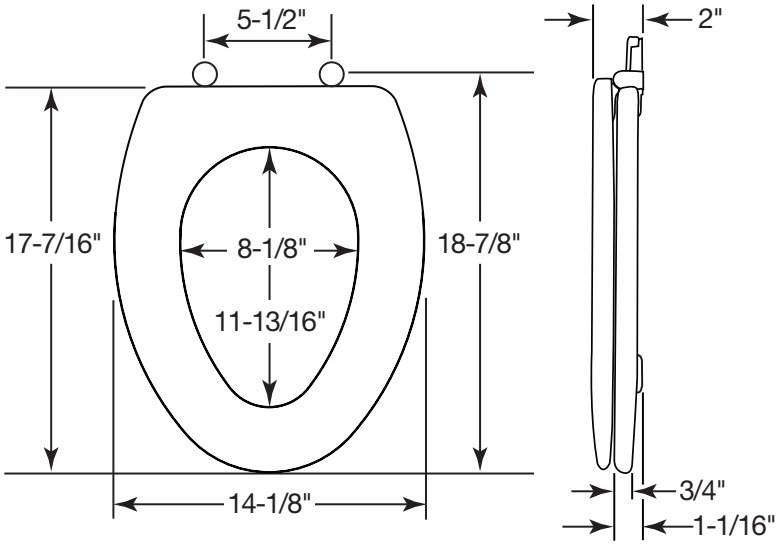

Proudly Made in the USA

Bemis Manufacturing Co., Sheboygan Falls, WI 53085
www.ToiletSeats.com

Phone: 800-558-7651 Fax: 800-292-3647

TOTO®

LT221

Atherton™ Rectangular Undercounter Lavatory

FEATURES

- 17"x 13"
- Rectangular Undercounter Lavatory
- ADA compliant
- Vitreous china
- Mounting assembly complete with installation template and mounting screw set
- Front overflow

MODELS

- LT221
  (#01)

COLORS/FINISHES

- #01 Cotton

PRODUCT SPECIFICATION

The undercounter lavatory shall be made of vitreous china. Lavatory shall be 17-3/4"in width and 13-3/8" in depth. Product shall be with overflow and lavatory shall include mounting assembly and be ADA compliant. **TOTO Model LT221**_____.

CODES/STANDARDS

- Meets ADA guidelines and ANSI A117.1 requirements when countertop is installed 864mm (34") from finished floor and lavatory is installed 47mm (1 7/8") minimum from front edge.
- Meets and exceeds ASME A112.19.2/CSA B45.1
- Certifications: IAPMO(cUPC), State of Massachusetts, City of Los Angeles, and others

LT221

Atherton™ Rectangular Undercounter Lavatory

SPECIFICATIONS

- **Waste:** 1-1/4" (32 mm)
- **Overall Size:** 21-3/8" (544mm) x 16-3/8" (417mm)
- **Cutout:** 17(432mm) x 12-5/8"(321mm)
- **Basin Depth:** 4″ (103 mm)
- **Basin:** 17-3/4" (452mm) x 13-3/8" (339mm)
- **Warranty:** One Year Limited Warranty
- **Material:** Vitreous china
- **Shipping Weight:** 23lbs (10.4 kg)
- **Shipping Dimensions:** 22-1/4" x 17-3/8" x 7-1/8″

INSTALLATION NOTES

Note: Low flow faucets are recommended.

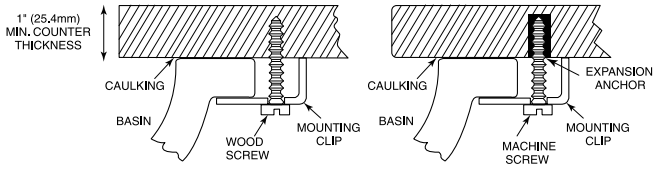

WOOD COUNTER INSTALLATION MARBLE SLAB INSTALLATION

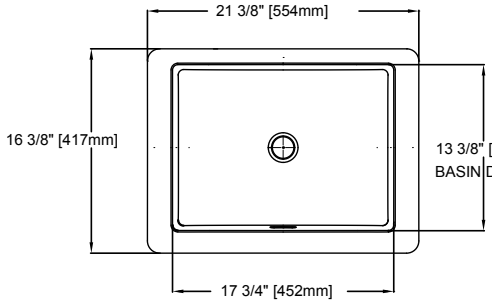

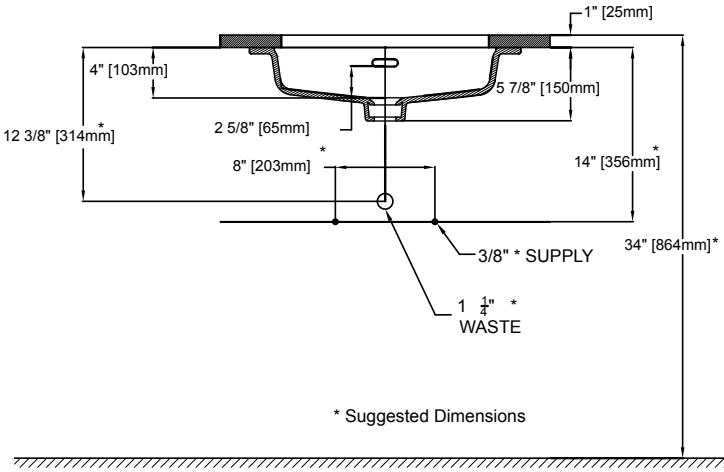

ADA COMPLIANCE CHECK

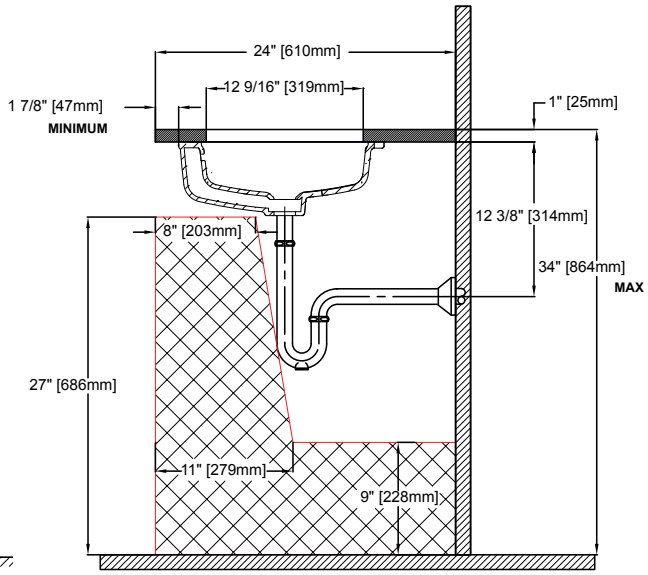

CONCETTO
Lavatory Centerset
S-Size
MODEL # 34270

Pure Freude an Wasser

GROHE

GROHE America, Inc | 200 North Gary Avenue, Suite G, Roselle, IL 60172
Phone: +1 (800) 444-7643 | Fax: +1 (800) 225-2778 | us-customerservice@grohe.com

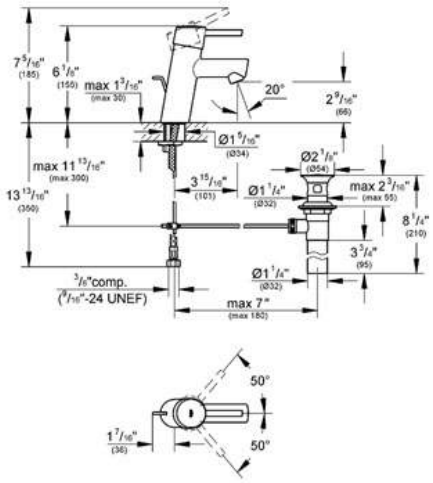

Product Description:
Lavatory Centerset
S-Size

Standard Specification:
- **GROHE StarLight®** finish
- **GROHE SilkMove®** ceramic cartridge
- **GROHE EcoJoy®** technology for less water and perfect flow
- **GROHE QuickFix™** installation system with centering support
- Single hole installation
- Metal lever
- Flow control
- 1 1/4" pop-up waste set
- Stainless Steel Braided Flexible Supplies
- Temperature limiter
- Max Flow Rate 1.5 gpm (5.7 L/min)

Applicable Codes & Standards:
- Energy Policy Act of 1992
- NSF 61
- ASME A112.18.1/CSA B125.1
- US Federal and State material regulations
- EPA WaterSense®
- ICC/ANSI A117.1
- CalGreen

Color:
- ❑ 34270 001 chrome
- ❑ 34270 EN1 Brushed Nickel inf

2603SMTE – ACCESSIBLE TUB-SHOWERS

inches (mm)

Interior: 56 x 30 ¼ x 78 (1420 x 770 x 1980)
Exterior: 60 x 33 ¼ x 79 ¼ (1525 x 845 x 2015)
Fax on Demand #6051

FEATURES

- Gelcoat surface
- 17″ (430 mm) skirt
- Smooth wall
- LH or RH drain
- Partial reinforcement to accommodate standard grab bar locations.
- Additional reinforcement available.
- 5-year limited warranty

OPTIONS

- Grab bars
- Removable seat
- Hand-held shower assembly with slide bar
- Pressure balancing mixing valve
- Curtain rod and/or shower curtain

CODE COMPLIANCE

- ADA
- FHA
- ICC/ANSI A117.1
- ANSI Z124.1.2
- HUD UM73a
- CAN/CSA-B651-04
- CAN/CSA-B45-02

**Code compliant when fully equipped and installed according to guidelines.

AQUATIC ADVANTAGE

- National distribution
- 5 manufacturing facilities
- Private fleet
- Centralized customer service
- Field support
- 24-hour fax-on-demand

COLOR & TRIM OPTIONS

Stock	Premium
Almond	Black
Biscuit	Mexican Sand
Bone	Sandbar
Linen	
Sterling Silver	
White	

**Additional custom colors available. (Contact Customer Service)

AQUATIC
Where Inspiration Takes Shape

Aquatic products may be specified as Lasco Bathware.

AQUATIC
Where Inspiration Takes Shape

Aquatic products may be specified as Lasco Bathware.

TECHNICAL SPECIFICATIONS

Fax on Demand #6051

2603SMTE

Interior: 56 x 30 ¼ x 78 (1420 x 770 x 1980)
Exterior: 60 x 33 ¼ x 79 ¼ (1525 x 845 x 2015)
inches (mm)

ADA/ANSI compliant when fully equipped and installed according to guidelines.

ANSI version shown.

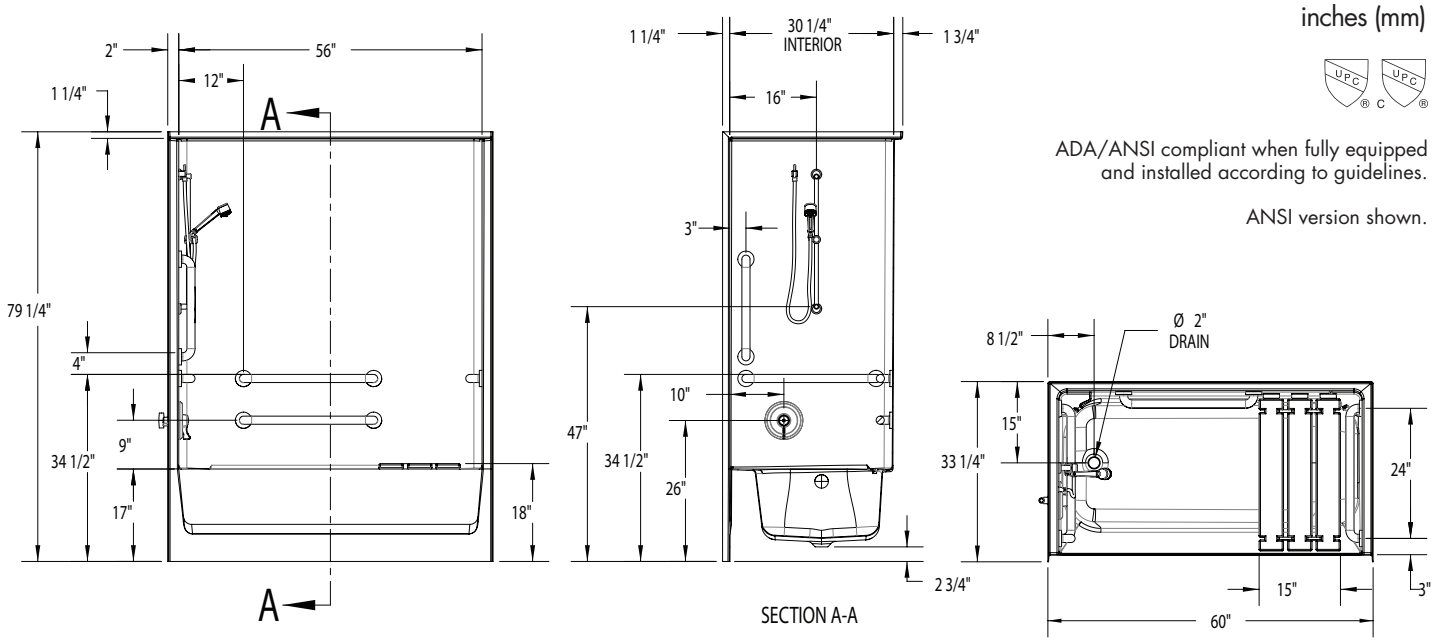

FEATURES lbs (kg)

Dimensional Tolerance ± ⅜". Dimensions needed for site preparation should be measured from the unit. Aquatic assumes no responsibility for preparatory work.

Type and Model #	Material	Wall Finish	Pieces	Drain	Skirt Height	Net Wt.	Pkg. Wt.
Tub-shower #2603SMTE	Gelcoat	Smooth	1	LH/RH	17" (430mm) skirt	199 (90)	209 (95)

DIMENSIONS

Specifications	inches (mm)
Width: Overall / Net	60 (1525) / 56 (1420)
Depth: Overall / Net	33 ¼ (845) / 32 (815)
Height: Overall / Net	79 ¼ (1980) / 78 (2015)
Enclosure Opening:	56 (1420)
Skirt Height:	17 (430)
Drain Rough-In (from Back Wall)	8 ½ (215)
Drain Rough-In (from Side Wall)	15 (380)
Drain: Diameter / Clearance	2 (50) / 2 ¾ (70)

FRAMING DIMENSIONS inches (mm)

Type	D Depth	W Width	H Height	A	B	C
Alcove	33 ¼ (845)	60 ⅛ (1525)	–	6 x 12 (150 x 305)	8 ½ (215)	15 (380)

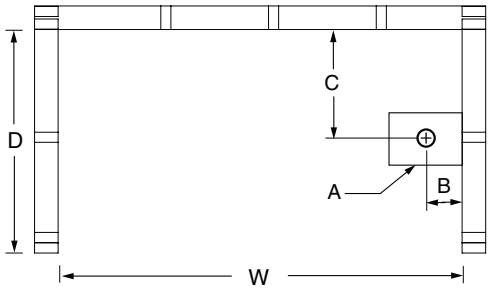

SUMP DATA

Top of Drain to Bottom of Overflow	Capacity to Overflow gal (ltr)	WIDTH @ centerline		DEPTH @ centerline	
		Top	Bottom	Top	Bottom
12 (305)	38 (144)	23 ¼ (590)	21 ¼ (540)	53 ¾ (1365)	45 ¼ (1150)

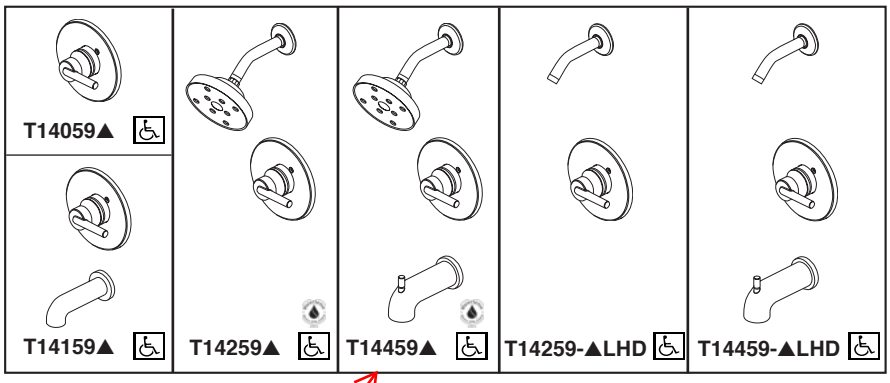

Submitted Model No.:

Specific Features:

Delta RP70175-15 will be provided, 1.5gpm. See attached.

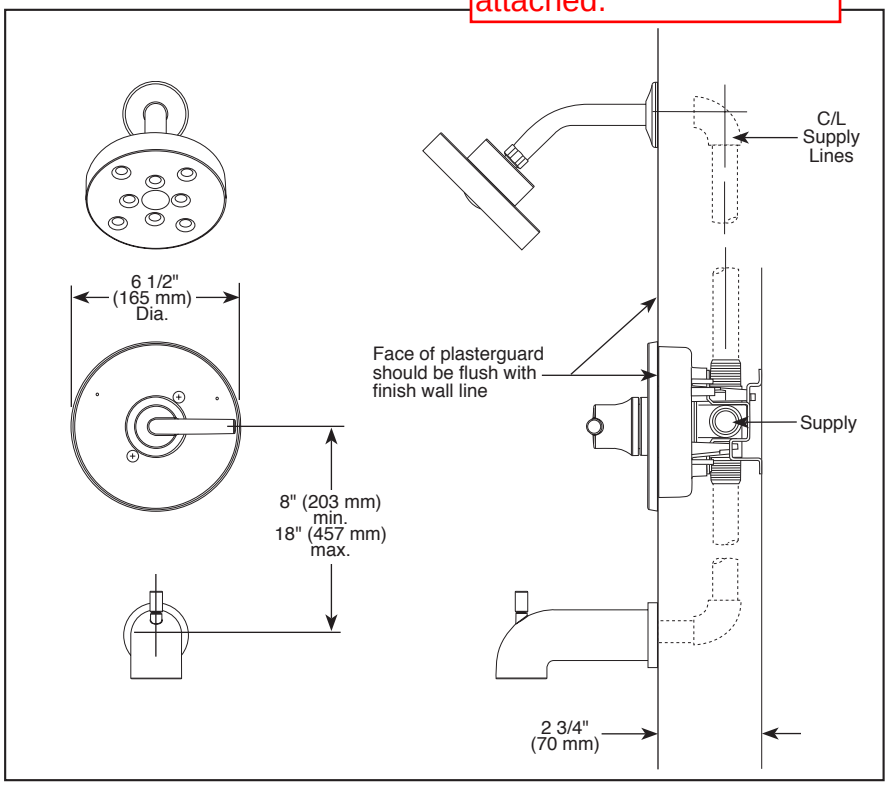

▲ Designate Proper Finish Suffix

RP70175▲ H_2O Showerhead

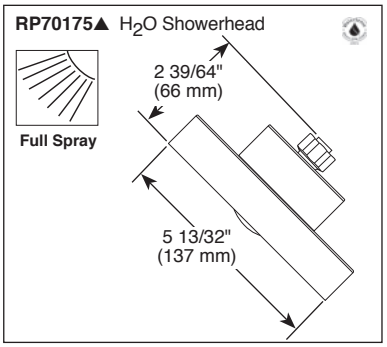

RP73371▲ Pull-Up Diverter

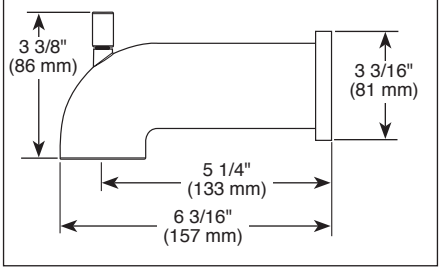

RP77350▲ No Diverter

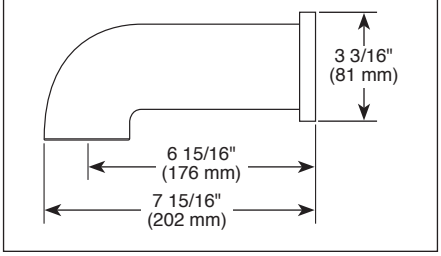

Delta reserves the right (1) to make changes in specifications and materials, and (2) to change or discontinue models, both without notice or obligation. Dimensions are for reference only. See current full-line price book or www.deltafaucet.com for finish options and product availability.

DSP-B-T14059 Rev. F

TUB AND SHOWER FAUCET TRIM

- Trinsic® Bath Collection
- Valve Only (T14059)
- Tub Only (T14159)
- Shower Only (T14259)
- Tub/Shower (T14459)

STANDARD SPECIFICATIONS:

- Pressure balanced single handle bath mixing valve trim
- Temperature only controlled with handle
- Field adjustable means to limit handle rotation into hot water zone
- 120° maximum handle rotation
- All parts replaceable from the front of the valve
- For use with MultiChoice® Universal rough valve body (R10000 Series)
- Lever handle
- ~~Single function H_2Okinetic Technology® showerhead; 2.0 gpm @ 80 PSI~~
- Maintains a balanced pressure of hot and cold water even when a valve is turned on or off elsewhere in the system
- Red/blue pad print temperature indicators on escutcheon
- "-LHD" models indicate less showerhead
- 1/2" CWT slip-on and spout adapter

WARRANTY

- Lifetime limited warranty on parts (other than electronic parts and batteries) and finishes: or, for commercial users, for 5 years from date of purchase.
- 5 year limited warranty on electronic parts (other than batteries); or, for commercial users, for 1 year from the date of purchase. No warranty is provided on batteries.

COMPLIES WITH:

- ASME A112.18.1 / CSA B125.1
- ASSE 1016
- Indicates compliance to ICC/ANSI A117.1 (valve control only)
- EPA WaterSense®

DELTA FAUCET COMPANY

55 E 111th Street, Indianapolis, Indiana 46280
350 South Edgeware Road, St. Thomas, ON N5P 4L1
© 2015 Masco Corporation of Indiana

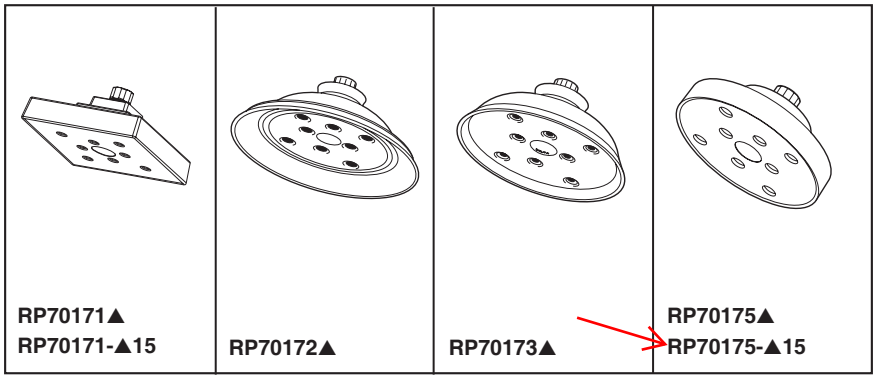

WATER EFFICIENT SHOWERHEADS

■ H_2Okinetic Technology®

Submitted Model No.: _____

Specific Features: _____

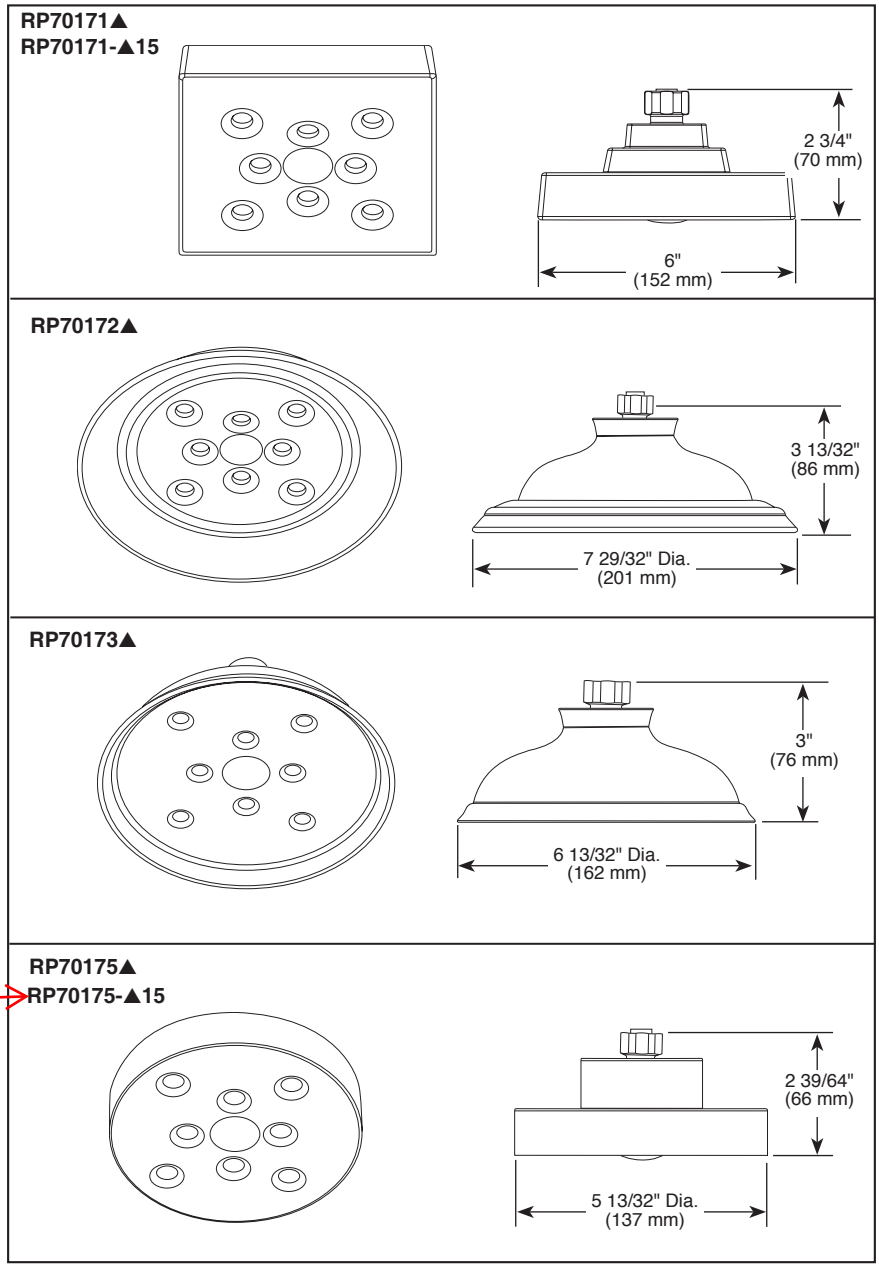

▲ Designate Proper Finish Suffix

STANDARD SPECIFICATIONS

- Full spray function.
- Standard 1/2" pipe itting.
- Maximum 2.0 gpm @ 80 psi, 7.6 L/min @ 550 kPa. (RP70171▲,RP70172▲,RP70173▲ & RP70175▲).
- Maximum 1.5 gpm @ 80 psi, 5.7 L/min @ 550 kPa. (RP70171-▲15 & RP70175-▲15).

WARRANTY

- Lifetime limited warranty on parts (other than electronic parts and batteries) and finishes: or, for commercial users, for 5 years from date of purchase.
- 5 year limited warranty on electronic parts (other than batteries); or, for commercial users, for 1 year from the date of purchase. No warranty is provided on batteries.

Spray Patterns

Full Spray

COMPLIES WITH:

- ASME A112.18.1 / CSA B125.1
- EPA WaterSense®

Delta reserves the right (1) to make changes in specifications and materials, and (2) to change or discontinue models, both without notice or obligation. Dimensions are for reference only. See current full-line price book or www.deltafaucet.com for finish options and product availability.

DSP-B-RP70172 Rev. C

DELTA FAUCET COMPANY

55 E. 111th Street, Indianapolis, Indiana 46280
350 South Edgeware Road, St. Thomas, ON N5P 4L1
© 2015 Masco Corporation of Indiana

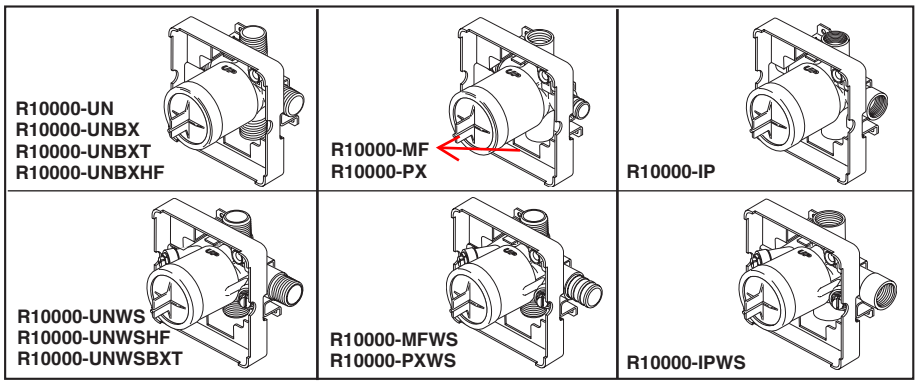

Submitted Model No.:_____

Specific Features:_____

R10000-UN
R10000-UNBX
R10000-UNBXT

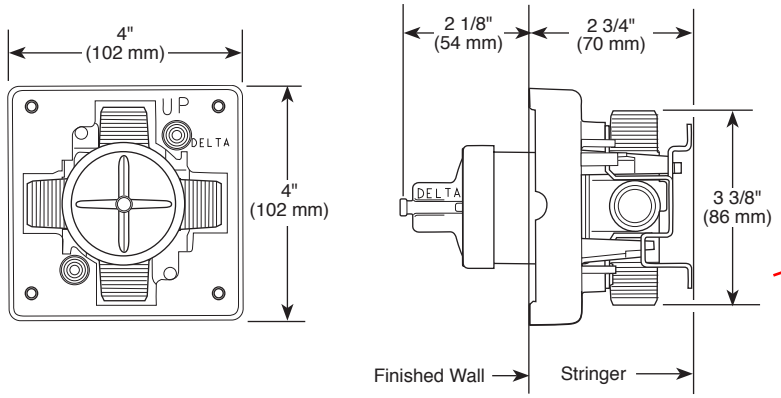

R10000-UNWS

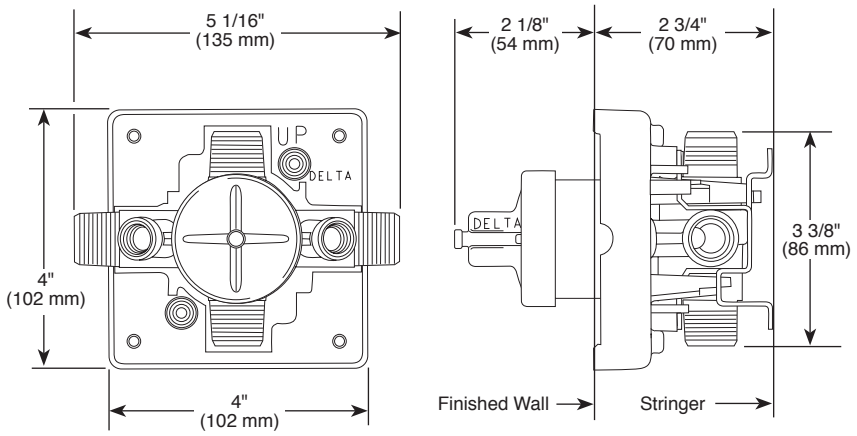

RP75136 Available Extension Kit

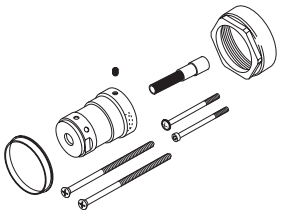

Delta reserves the right (1) to make changes in specifications and materials, and (2) to change or discontinue models, both without notice or obligation. Dimensions are for reference only. See current full-line price book or www.deltafaucet.com for finish options and product availability.

DSP-B-R10000 Rev. I

MULTICHOICE® UNIVERSAL ROUGH VALVE BODY

- R10000-UN (Universal Inlets/Outlets)
- R10000-UNBX (Universal Single Box Model)
- R10000-UNBXHF (High Flow Shower Only)
- R10000-UNBXT (Thin Wall)
- R10000-UNWS (Universal with Stops)
- R10000-UNWSHF (High Flow with Stops)
- R10000-UNWSBXT (Thin Wall with Stops)
- R10000-PX (Pex Crimp Connections with UN Outlets)
- R10000-PXWS (Pex Crimp Connections with Stop with UN Outlets)
- R10000-IP (IPS Inlets/Outlets)
- R10000-IPWS (IPS with Stops)
- R10000-MF (Pex Cold Expansion Connections with UN Outlets)
- R10000-MFWS (Pex Cold Expansion with Stops with UN Outlets)

STANDARD SPECIFICATIONS:

- Forged brass body.
- Back-to-Back installation capabilities.
- Can be tested with air (200 PSI) or water (300 PSI) without valve using supplied test cap.
- Square plasterguard allows for right angle cuts.
- Thin wall mounting.
- For use with MultiChoice® Universal single or dual function trim. Cartridge ships with trim.
- 1/2" outlets and connections.

Note: No tub outlet in HF model.

Note: Should use proper fitting with each type (copper tubing, iron pipe, and pex fitting).

Note: Should use proper tooling with crimping pex fitting and cold expansion pex models.

Note: IP indicates female 1/2" threaded connections.

Note: UN indicates Universal type fitting and is 1/2" NPT male thread with 1/2" C.W.T. female sweat.

WARRANTY

- Lifetime limited warranty on parts (other than electronic parts and batteries) and finishes: or, for commercial users, for 5 years from date of purchase.
- 5 year limited warranty on electronic parts (other than batteries); or, for commercial users, for 1 year from the date of purchase. No warranty is provided on batteries.

COMPLIES WITH:

- ASME A112.18.1 / CSA B125.1

DELTA FAUCET COMPANY
55 E. 111th Street, Indianapolis, Indiana 46280
350 South Edgeware Road, St. Thomas, ON N5P 4L1
© 2015 Masco Corporation of Indiana

Fiber-Fab®

World Class Tubs & Showers

Submittal Sheet

Models 48H1FWA, H2FWA, BFFWA Barrier-Free Shower

Date: _____ Job Name: _____

Customer: _____ Bid #: _____

Modifications: _____ Quantity: _____

Color	White
Ext. Dim.	48" W x 37½" D x 79¼" H
Warranty	10 Year Limited Warranty
Weight	150 Lbs. ± 10 Lbs
Material	Gelcoat

STANDARD FEATURES

1. One-piece construction allows for easy installation
2. Sandwich-Wall Construction
3. Sanitary Ware Gel Coat
4. Anti-slip floor provides added safety (meets ASTM -462)
6. Clear floor space is 45" x 34⅜"

OPTIONAL FEATURES

- Low Profile bottom
- ~~Pre-installed through-bolted curtain rod~~
- ~~Pre-installed through-bolted flangeless grab bar(s)~~
- ~~Pre-installed four-legged fold-down seat~~
- ~~Barrier-free ramps~~
- ~~Barrier-free splash guard~~
- ~~Stainless steel recessed soap dish~~

Model 48H1FWA

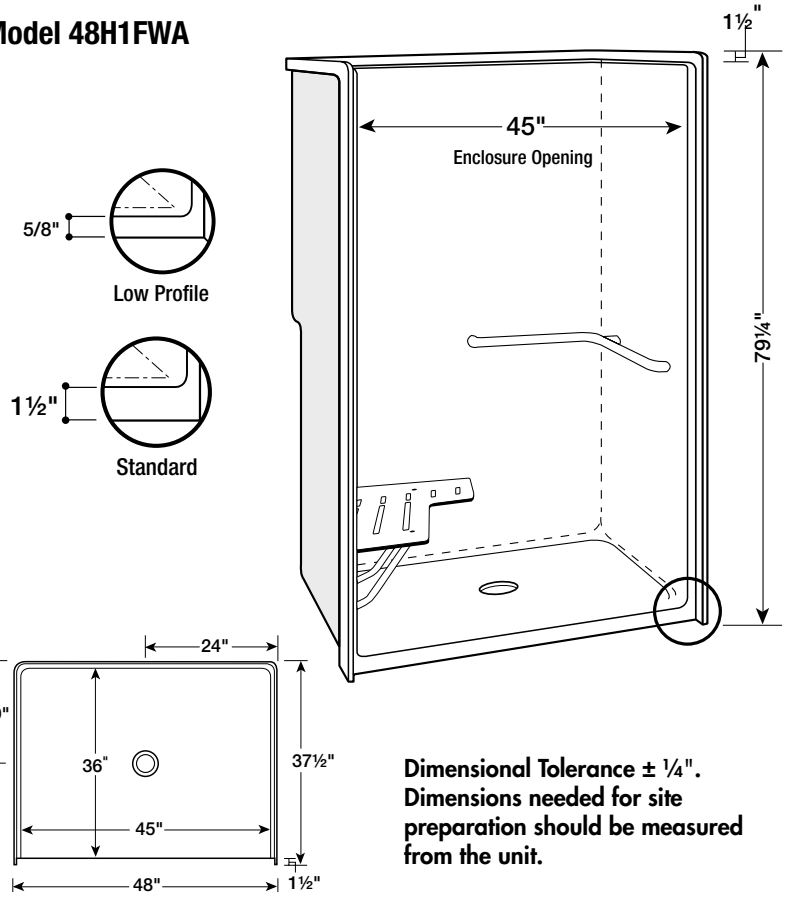

Dimensional Tolerance ± ¼". Dimensions needed for site preparation should be measured from the unit.

Model 48H1FWA: Features a fold-down seat with phenolic seat and stainless steel support tubing, as well as a 1¼" diameter "L" shaped stainless steel grab bar. Please specify Left- or Right-hand plumbing.

Model 48H2FWA: Includes a full wrap-around 1¼" diameter stainless steel grab bar.

Model 48BFFWA: Is a barrier-free shower stall without bar or seat option.

Low Profile Option: This option brings the threshold height on the model 48" transfer shower to ½" after the installation of flooring. **However, a 8"x 8" area must be blocked out around the drain to allow the drain to sit below the subfloor.**

Plumbing Contractor Approval	Date	General Contractor Approval	Date
Engineer Approval	Date	Architect Approval	Date

12657 Portland Road NE • P.O. Box 78 Gervais, Oregon 97026-0078 • Phone: (503) 792-3456 • 1-877-792-3456 • Fax: (503) 792-3603
E-mail: ffi@fiberfab.com • www.fiberfab.com • Monday - Friday from 8:00 am to 4:30 pm

Removable Threshold

(Model #RT-WH)

Fiberfab ERT Removable Threshold

Fiber-Fab INC. SINCE 1957
12657 Portland Rd NE
P O Box 78
Gervais, OR 97026-0078
Ph: 503/792-3456 Fax: 503/792-3603

Length is custom cut by factory to fit shower stall.

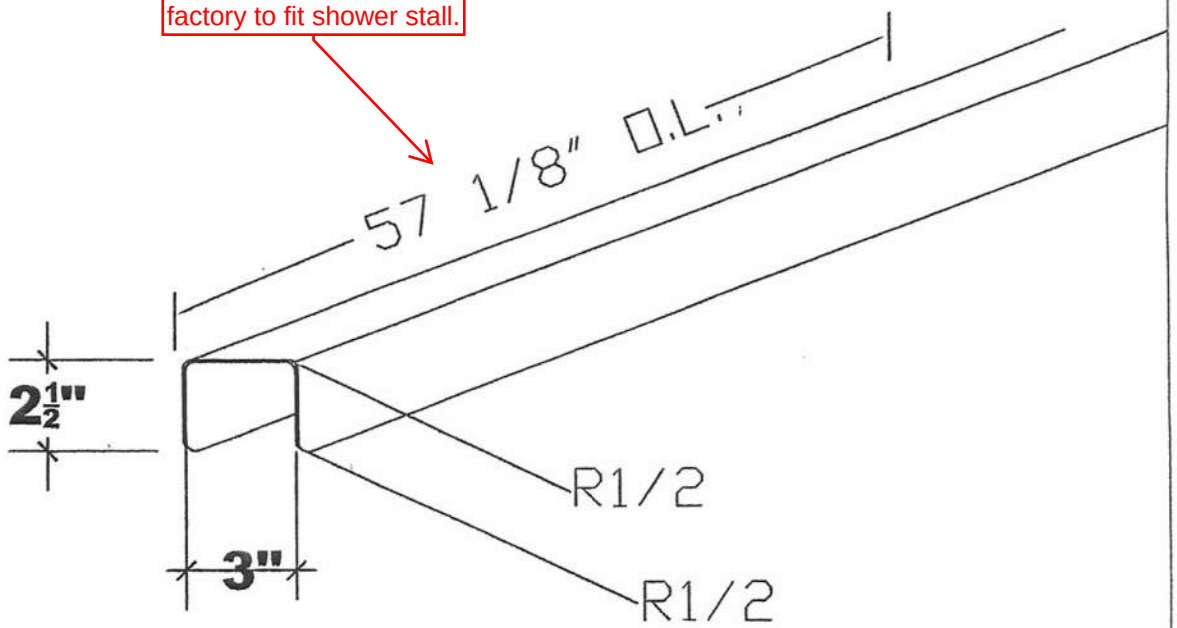

Dimensions shown are the dimensions of the Removable Threshold only. The actual threshold height will be determined by the Removable Threshold and the threshold of the shower stall.

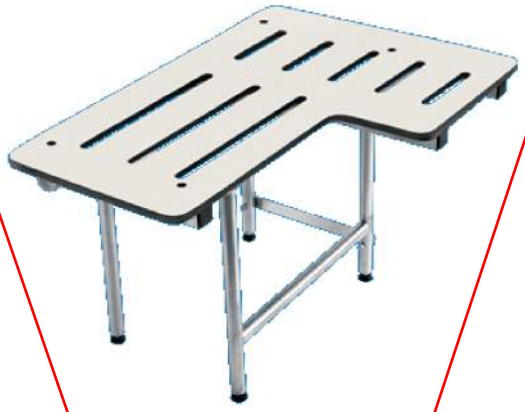

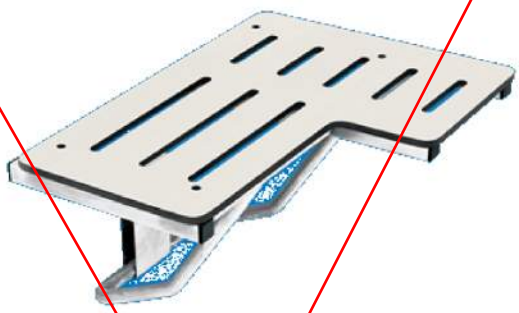

▲ Top of page

Symmons Valves

Temptrol 2000 pressure-balancing mixing valve with built-in choke and adjustable stop screw to limit handle turn and integral service stops.

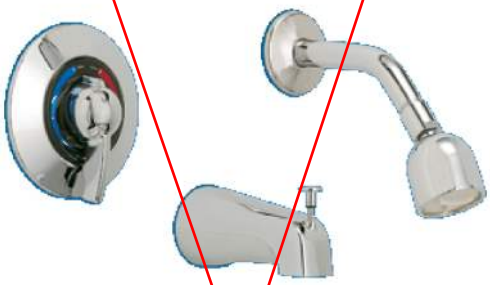

Tub/Shower VS252X

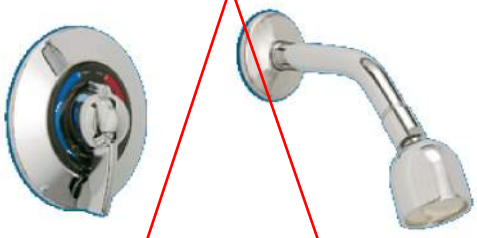

Shower VS251X

▲ Top of page

Grab Bars

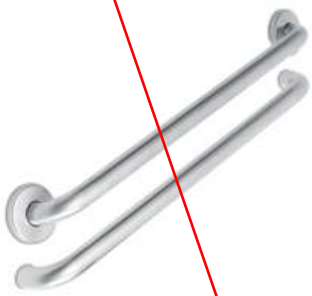

Standard Lengths:

12" (305mm)	36" (914mm)
16" (406mm)	40" (1016mm)
18" (457mm)	42" (1067mm)
24" (610mm)	48" (1219mm)

Straight Bars
This bar can be mounted horizontally, vertically or diagonally for use individually or in combination with other grab bars. All bars are 11/4" in diameter with concealed screw flanges and are 18 gauge. Additional bar configurations, finishes and coatings are available by special order.

Field Installation of Grab Bars
Installing grab bars in existing Fiber-Fab bathtubs and showers does not require additional backing. Because Fiber-Fab's units have an extremely high content of resin and fiberglass and low filler content, the strength and rigidity needed to support the mounting of grab bars are inherent to the product (Fiber-

H703PH Folding Shower Seat

Frame is stainless steel Type 304, 1"x18 gauge satin finish. Legs angle into base of wall for rigid support. When not in use, seat folds up against wall to conserve space and thumb screw holds it in place. Seat measures 18" long and projects 15½" from wall.

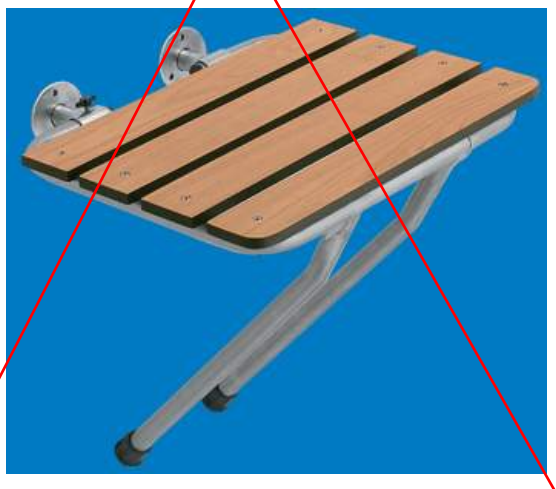

Removable Threshold Model ERT

This threshold can be field installed in our Assisted Living Models #38, 60 and 63 to help retain water. When shower needs to be converted to an ADA compliant shower, the threshold can be easily removed. Available in Satin Stainless Steel, Polished Stainless Steel or White Powder Coat. Splashguard not included.

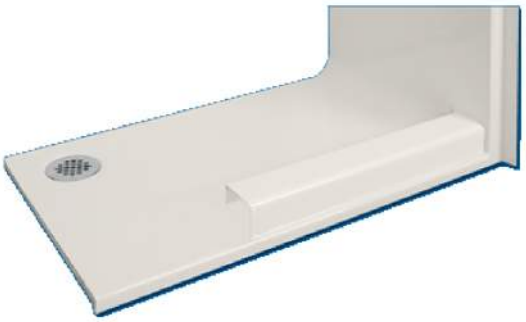

Shower Drain V140NC-##

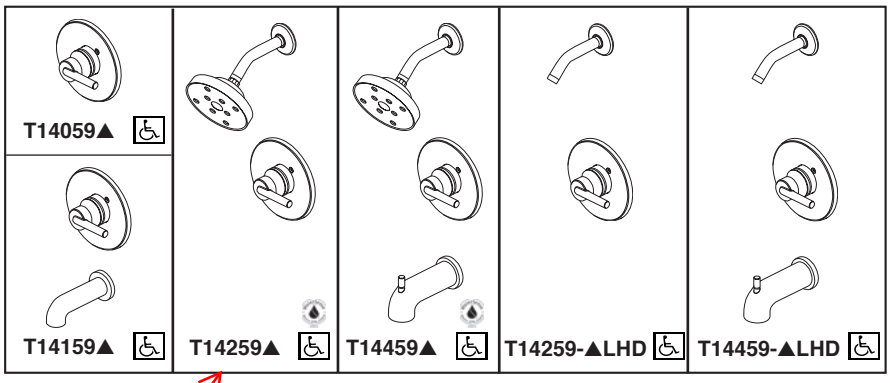

Submitted Model No.:

Specific Features:

Delta RP70175-15 will be provided, 1.5gpm. See attached.

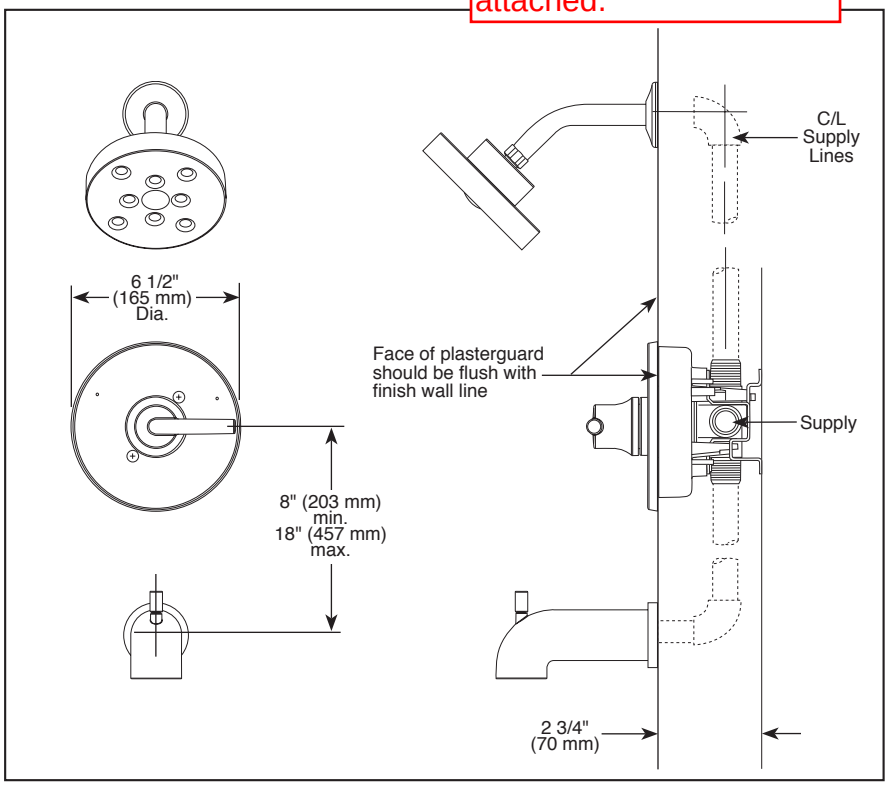

▲ Designate Proper Finish Suffix

RP70175▲ H_2O Showerhead

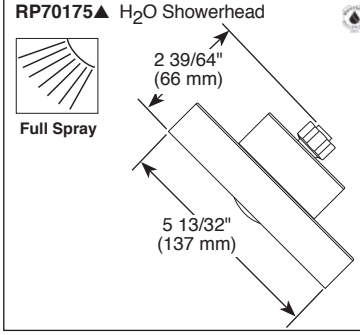

RP73371▲ Pull-Up Diverter

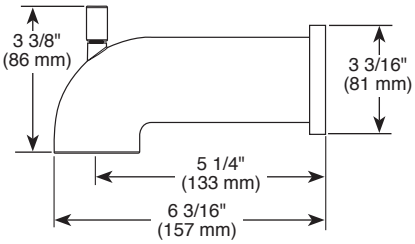

RP77350▲ No Diverter

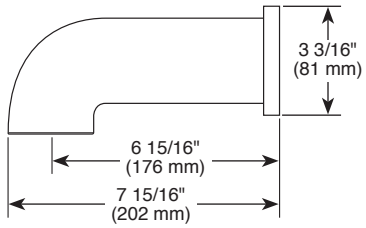

Delta reserves the right (1) to make changes in specifications and materials, and (2) to change or discontinue models, both without notice or obligation. Dimensions are for reference only. See current full-line price book or www.deltafaucet.com for finish options and product availability.

DSP-B-T14059 Rev. F

TUB AND SHOWER FAUCET TRIM

- Trinsic® Bath Collection
- Valve Only (T14059)
- Tub Only (T14159)
- Shower Only (T14259)
- Tub/Shower (T14459)

STANDARD SPECIFICATIONS:

- Pressure balanced single handle bath mixing valve trim
- Temperature only controlled with handle
- Field adjustable means to limit handle rotation into hot water zone
- 120° maximum handle rotation
- All parts replaceable from the front of the valve
- For use with MultiChoice® Universal rough valve body (R10000 Series)
- Lever handle
- ~~Single function H_2Okinetic Technology® showerhead; 2.0 gpm @ 80 PSI~~
- Maintains a balanced pressure of hot and cold water even when a valve is turned on or off elsewhere in the system
- Red/blue pad print temperature indicators on escutcheon
- "-LHD" models indicate less showerhead
- 1/2" CWT slip-on and spout adapter

WARRANTY

- Lifetime limited warranty on parts (other than electronic parts and batteries) and finishes: or, for commercial users, for 5 years from date of purchase.
- 5 year limited warranty on electronic parts (other than batteries); or, for commercial users, for 1 year from the date of purchase. No warranty is provided on batteries.

COMPLIES WITH:

- ASME A112.18.1 / CSA B125.1
- ASSE 1016
- Indicates compliance to ICC/ANSI A117.1 (valve control only)
- EPA WaterSense®

DELTA FAUCET COMPANY

55 E 111th Street, Indianapolis, Indiana 46280
350 South Edgeware Road, St. Thomas, ON N5P 4L1
© 2015 Masco Corporation of Indiana

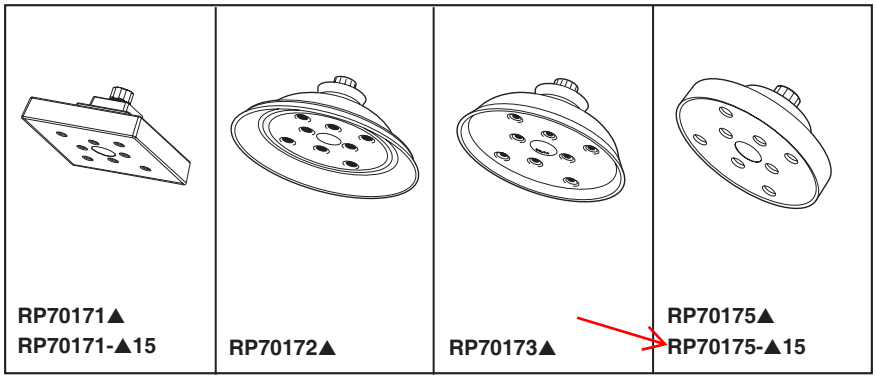

WATER EFFICIENT SHOWERHEADS

■ H_2Okinetic Technology®

Submitted Model No.: _____

Specific Features: _____

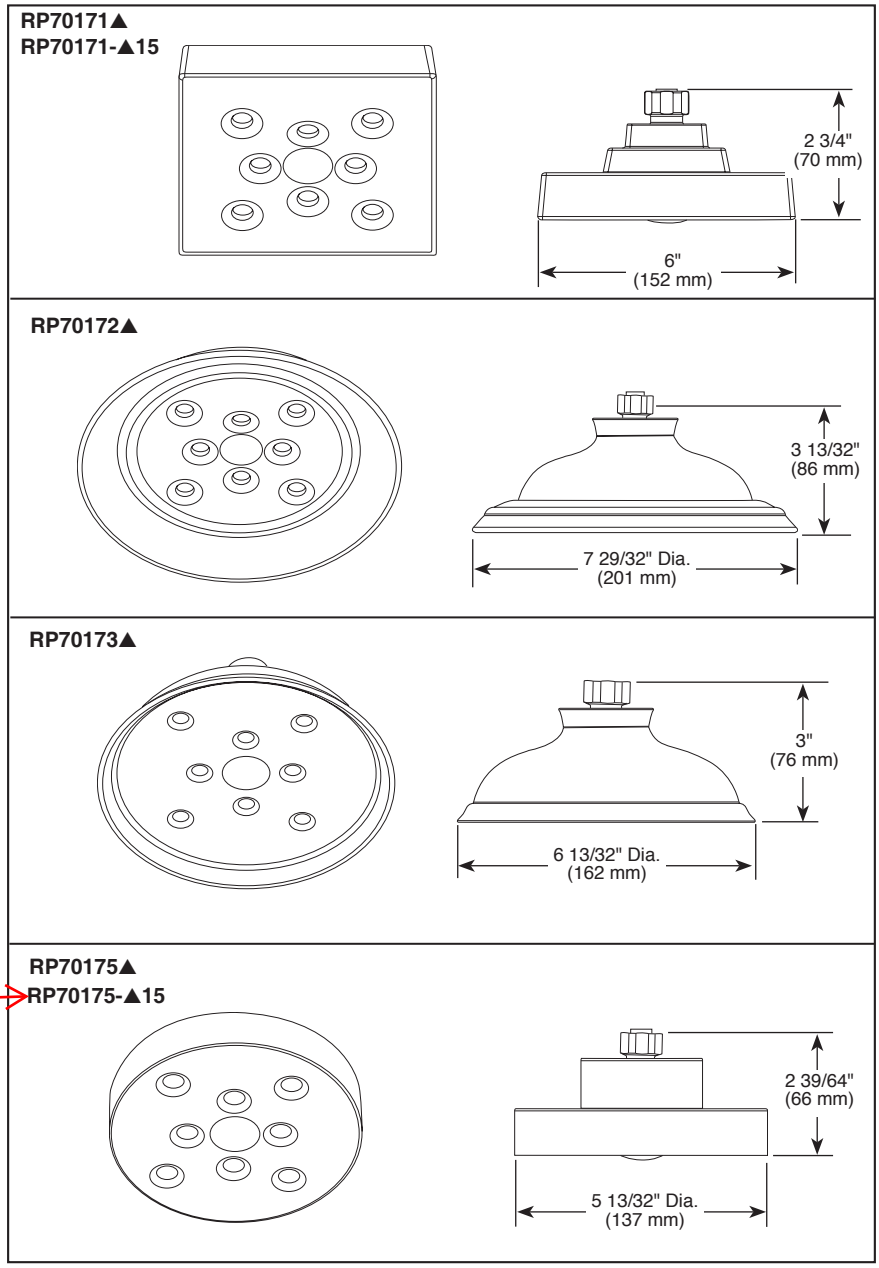

▲ Designate Proper Finish Suffix

STANDARD SPECIFICATIONS

- Full spray function.
- Standard 1/2" pipe itting.
- Maximum 2.0 gpm @ 80 psi, 7.6 L/min @ 550 kPa. (RP70171▲,RP70172▲,RP70173▲ & RP70175▲).
- Maximum 1.5 gpm @ 80 psi, 5.7 L/min @ 550 kPa. (RP70171-▲15 & RP70175-▲15).

WARRANTY

- Lifetime limited warranty on parts (other than electronic parts and batteries) and finishes: or, for commercial users, for 5 years from date of purchase.
- 5 year limited warranty on electronic parts (other than batteries); or, for commercial users, for 1 year from the date of purchase. No warranty is provided on batteries.

Spray Patterns

Full Spray

COMPLIES WITH:

- ASME A112.18.1 / CSA B125.1
- EPA WaterSense®

Delta reserves the right (1) to make changes in specifications and materials, and (2) to change or discontinue models, both without notice or obligation. Dimensions are for reference only. See current full-line price book or www.deltafaucet.com for finish options and product availability.

DSP-B-RP70172 Rev. C

DELTA FAUCET COMPANY

55 E. 111th Street, Indianapolis, Indiana 46280
350 South Edgeware Road, St. Thomas, ON N5P 4L1
© 2015 Masco Corporation of Indiana

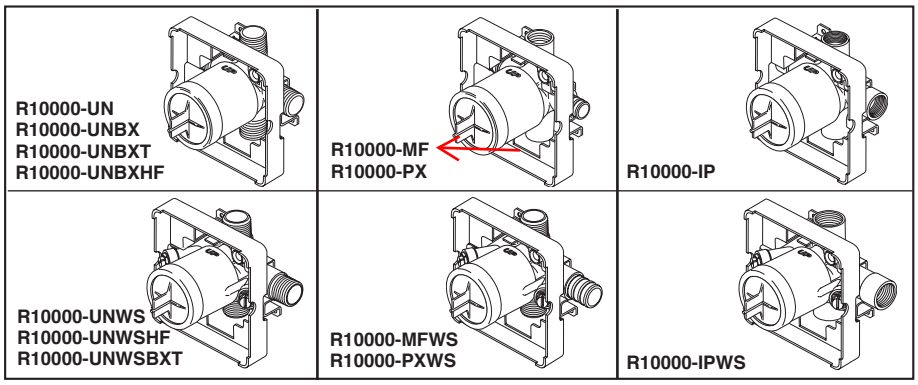

Submitted Model No.:_____

Specific Features:_____

R10000-UN
R10000-UNBX
R10000-UNBXT

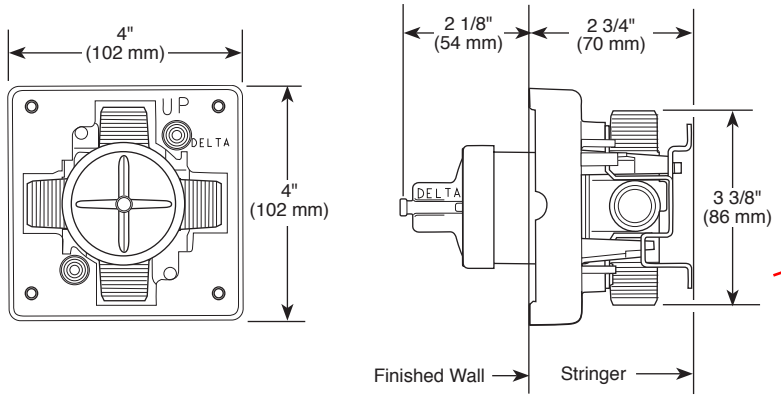

R10000-UNWS

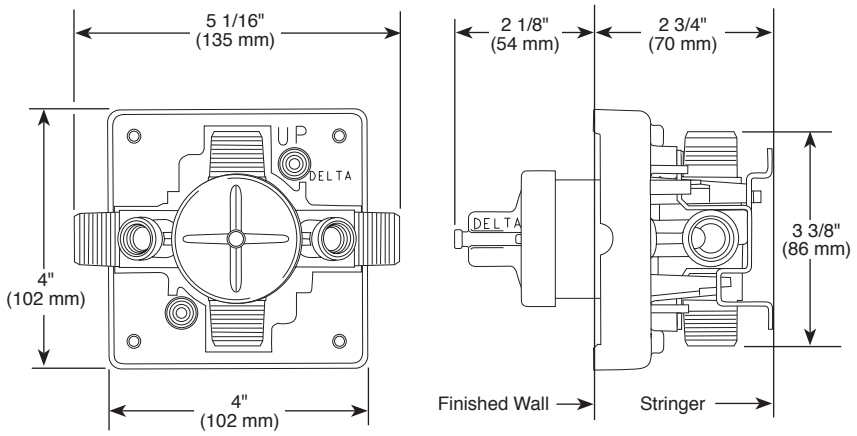

RP75136 Available Extension Kit

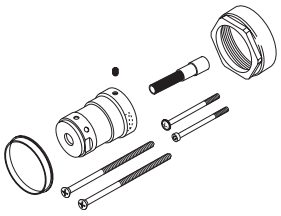

Delta reserves the right (1) to make changes in specifications and materials, and (2) to change or discontinue models, both without notice or obligation. Dimensions are for reference only. See current full-line price book or www.deltafaucet.com for finish options and product availability.

DSP-B-R10000 Rev. I

MULTICHOICE® UNIVERSAL ROUGH VALVE BODY

- R10000-UN (Universal Inlets/Outlets)
- R10000-UNBX (Universal Single Box Model)
- R10000-UNBXHF (High Flow Shower Only)
- R10000-UNBXT (Thin Wall)
- R10000-UNWS (Universal with Stops)
- R10000-UNWSHF (High Flow with Stops)
- R10000-UNWSBXT (Thin Wall with Stops)
- R10000-PX (Pex Crimp Connections with UN Outlets)
- R10000-PXWS (Pex Crimp Connections with Stop with UN Outlets)
- R10000-IP (IPS Inlets/Outlets)
- R10000-IPWS (IPS with Stops)
- R10000-MF (Pex Cold Expansion Connections with UN Outlets)
- R10000-MFWS (Pex Cold Expansion with Stops with UN Outlets)

STANDARD SPECIFICATIONS:

- Forged brass body.
- Back-to-Back installation capabilities.
- Can be tested with air (200 PSI) or water (300 PSI) without valve using supplied test cap.
- Square plasterguard allows for right angle cuts.
- Thin wall mounting.
- For use with MultiChoice® Universal single or dual function trim. Cartridge ships with trim.
- 1/2" outlets and connections.

Note: No tub outlet in HF model.

Note: Should use proper fitting with each type (copper tubing, iron pipe, and pex fitting).

Note: Should use proper tooling with crimping pex fitting and cold expansion pex models.

Note: IP indicates female 1/2" threaded connections.

Note: UN indicates Universal type fitting and is 1/2" NPT male thread with 1/2" C.W.T. female sweat.

WARRANTY

- Lifetime limited warranty on parts (other than electronic parts and batteries) and finishes: or, for commercial users, for 5 years from date of purchase.
- 5 year limited warranty on electronic parts (other than batteries); or, for commercial users, for 1 year from the date of purchase. No warranty is provided on batteries.

COMPLIES WITH:

- ASME A112.18.1 / CSA B125.1

DELTA FAUCET COMPANY
55 E. 111th Street, Indianapolis, Indiana 46280
350 South Edgeware Road, St. Thomas, ON N5P 4L1
© 2015 Masco Corporation of Indiana

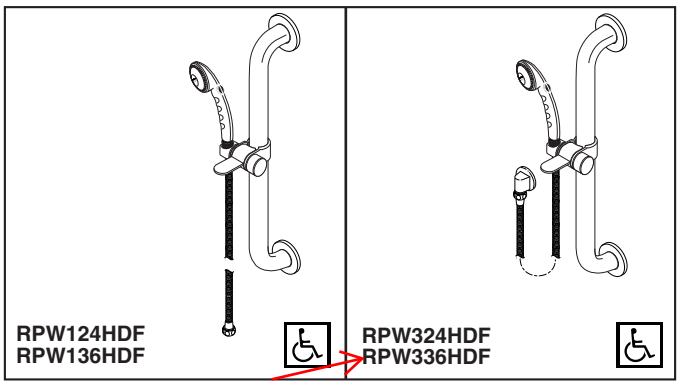

Submitted Model No.: _____

Specific Features: _____

DELTA COMMERCIAL

BATH VALVES

- Personal Hand Held Shower with Push Button On-Off Control–Not a Positive Shut Off
- Fixed Spray
- 69" (1753 mm) Double Spiral Metal Hose
- 24" (610 mm) & 36" (914 mm) Slide/Grab Bars
- ADA Adjustable Slide
- Atmospheric Vacuum Breaker (Models RPW324HDF and RPW336HDF only)
- 90° Wall Supply Elbow (Models RPW324HDF and RPW336HDF only)

COMPLIES WITH:

Indicates ADA compliance to ICC/ANSI A117.1

STANDARD SPECIFICATIONS:

- Personal white ABS hand held shower with fixed spray with push button on-off control–not a positive shut-off.
- 69" (1753 mm) double spiral metal hose.
- 24" (610 mm) and 36" (914 mm) stainless steel finish slide/grab bars.
- ADA compliant adjustable slide mechanism.
- Chrome plated atmospheric vacuum breaker, 1/2" IPS female inlet, 1/2"-14 NPSM male threaded outlet for exposed applications only. (Models RPW324HDF and RPW336HDF only).
- 90° chrome plated wall supply elbow, 1/2" IPS female inlet; 1/2"-14 NPSM male threaded outlet. (Models RPW324HDF and RPW336HDF only).
- 2.5 gpm @ 80 psi (9.5 L/min @ 552 kPa) from sprayhead.

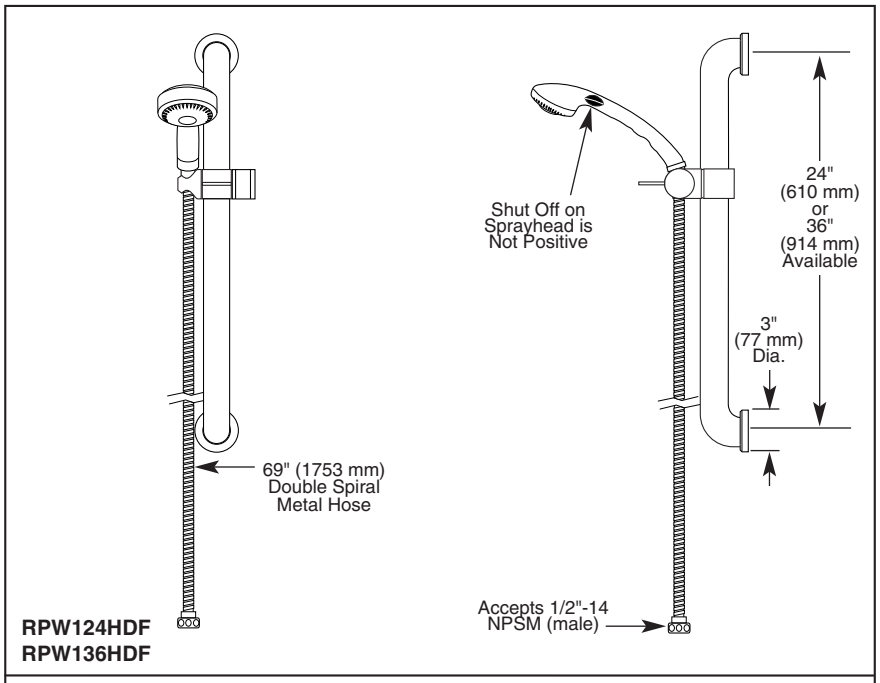

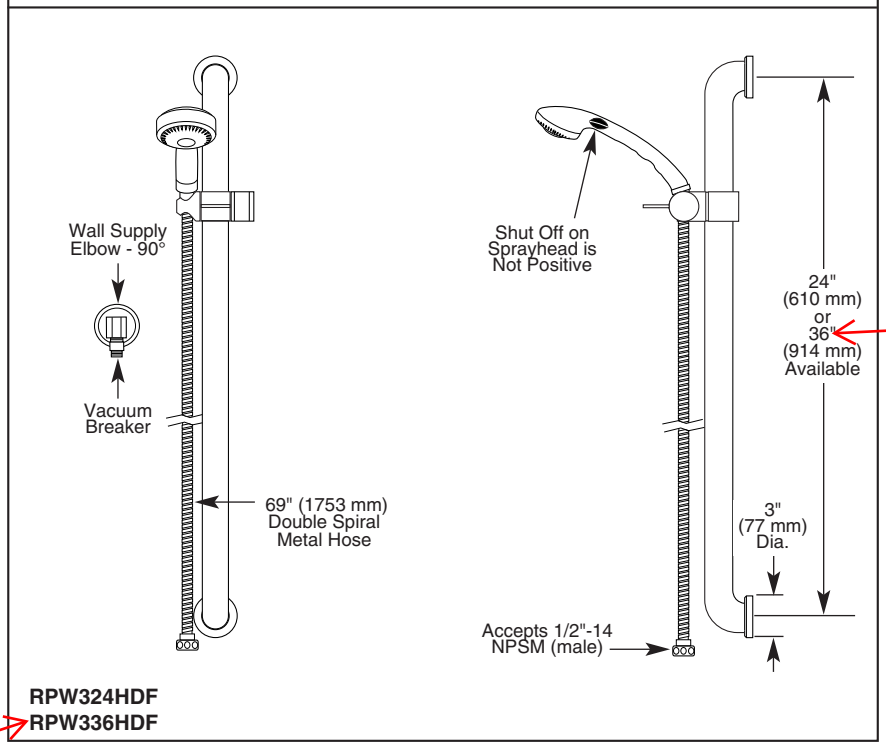

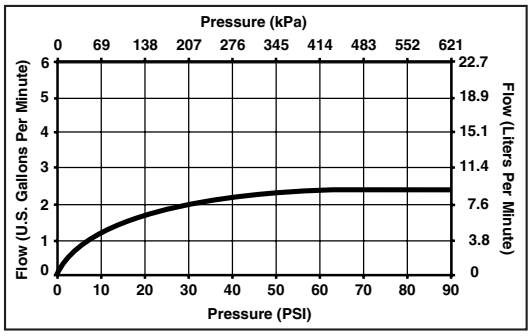

Delta reserves the right (1) to make changes in specifications and materials, and (2) to change or discontinue models, both without notice or obligation. Dimensions are for reference only.

Standard Features	RPW124HDF	RPW136HDF	RPW324HDF	RPW336HDF
Personal White ABS Hand Held Shower with Fixed Spray Push Button On-Off Control–Not a Positive Shut-Off	◆	◆	◆	◆
69" (1753 mm) Double Spiral Metal Hose	◆	◆	◆	◆
Chrome Plated Atmospheric Vacuum Breaker, 1/2" IPS Female Inlet, 1/2"-14 NPSM Male Threaded Outlet for Exposed Applications Only			◆	◆
90° Chrome Plated Wall Supply Elbow, 1/2" IPS Female Inlet, 1/2"-14 NPSM Male Threaded Outlet			◆	◆
24" (610 mm) Stainless Steel Wall Bar with Slide (allows for adjustable shower height)	◆		◆	
36" (914 mm) Stainless Steel Wall Bar with Slide (allows for adjustable shower height)		◆		◆
ADA Adjustable Slide Mechanism	◆	◆	◆	◆
2.5 gpm @ 80 psi (9.5 L/min @ 552 kPa) from Sprayhead	◆	◆	◆	◆

Available Options for Field Conversion:

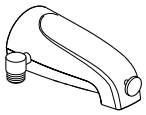

- Chrome plated pull-up diverter spout (for hand held shower only or tub and hand shower only applications), 1/2" or 3/4" IPS. Order RP3914.

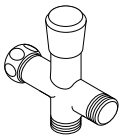

- Chrome plated brass shower arm diverter. Order RP32550.

DELTA COMMERCIAL

Indianapolis, Indiana 46280
A Division of Masco Corporation of Indiana
© 2002 Masco Corporation of Indiana

AURORA COLLECTION

SPECIFICATIONS MODEL LS18304

GENERAL
Fine quality sink formed of heavy duty 18 gauge, type 304 nickel bearing stainless steel.

DESIGN FEATURES
Bowl depth 9” with inside bowl dimensions 21-3/8” X15-3/4” and over all 23-3/8” X 17-3/4”
Finish: Inside bowl surfaces polished to a uniform satin finish.
Underside: High density sound absorption pads covered with a thick rubberized insulation layer on all bottom surfaces.

Other: Drain opening 3 ½”.

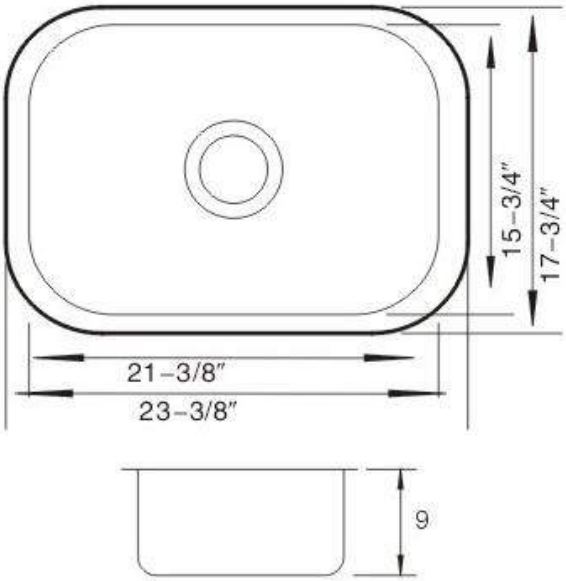

CUPC certified
Minimum cabinet size 24”
Product shall be specified as LS18304

OPTIONAL ACCESSORIES:
Sink Drain: A-SS-01, A-SS-02
Stainless Steel Grids: G304

CONCETTO
Single-lever sink mixer 1/2"
MODEL # 32665

Pure Freude an Wasser

GROHE

GROHE America, Inc | 200 North Gary Avenue, Suite G, Roselle, IL 60172
Phone: +1 (800) 444-7643 | Fax: +1 (800) 225-2778 | us-customerservice@grohe.com

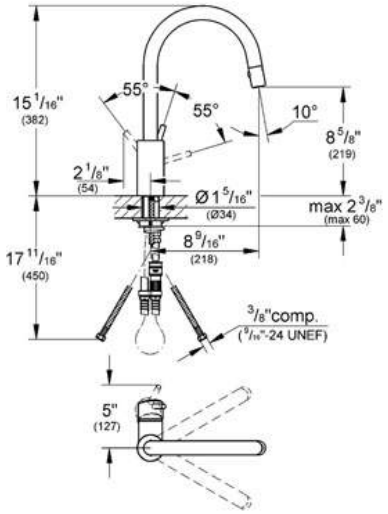

Product Description:
Single-lever sink mixer 1/2"

Standard Specification:
- **GROHE StarLight®** finish
- **GROHE SilkMove®** ceramic cartridge
- Single hole installation
- Swivel Spout
- Extractable integrated trigger spray
- Integrated non-return valve
- Stainless Steel Braided Flexible Supplies
- Quick installation system
- **Protected against backflow**
- Max Flow Rate 1.75 gpm (6.6 L/min)
- Variable Handle Positioning

Applicable Codes & Standards:
- Energy Policy Act of 1992
- NSF 61
- ASME A112.18.1/CSA B125.1
- US Federal and State material regulations
- ICC/ANSI A117.1
- CalGreen

Color:
- ❑ 32665 001 chrome
- ❑ 32665 DC1 supersteel

ELKAY®

SPECIFICATIONS

Gourmet Lustertone® Undermount Single Bowl Sink
Model ELUHAD Series - A.D.A. Compliant

NEW ELUH Installation Options

ELUH models have been redesigned to accommodate 1/2" reveal and no reveal installation options.

GENERAL

Highest quality sink formed of #18 (1.2mm) gauge, type 304 (18-8) nickel bearing stainless steel. Undermount.

DESIGN FEATURES

ELUHAD Bowl Depth: 4-1/2" (114mm), 5" (127mm) or 5-1/2" (140mm)

Finish: Exposed surfaces are hand polished to a Lustrous Highlighted Satin finish.

Underside: Sound dampening pads with spray undercoating to dampen sound and reduce condensation.

OTHER

Drain Opening: 3-1/2" (89mm) center rear location.

NOTE: All Elkay undermount sinks are designed to attach to the underside of any solid surface countertop.

Sink complies with ASME A112.19.3/ CSA B45.4

Sinks are listed by IAPMO® as meeting the applicable requirements of the Uniform Plumbing Code®, International Plumbing Code®, and National Plumbing Code of Canada.

These sinks are compliant to ADA and ANSI/ICC A117.1 accessibility requirements when installed according to the requirements outlined in these standards.

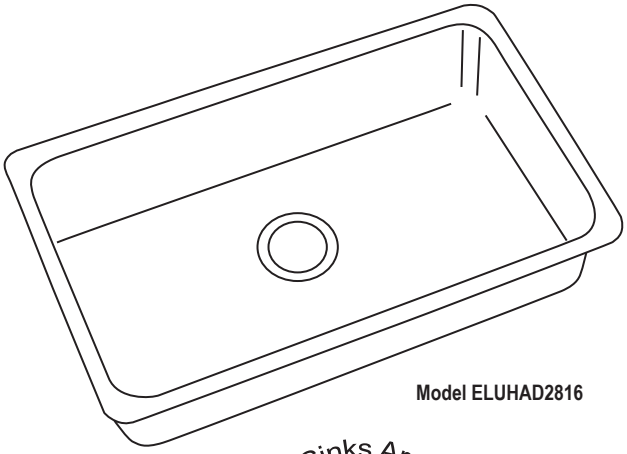

Model ELUHAD2816

Sinks Are MADE IN USA™

SINK DIMENSIONS*

Model Number	Overall Length A	Overall Width B	Inside Each Bowl Length C	Inside Each Bowl Width D	Inside Each Bowl Depth	Cutout in Countertop	Template Packed with Every Sink	Minimum Cabinet Size
ELUHAD1116	14 (356mm)	18-1/2 (470mm)	11-1/2 (292mm)	16 (406mm)	**	See template packed with sink.	1000001422	18 (457mm)
ELUHAD1212	14-1/2 (368mm)	14-1/2 (368mm)	12 (305mm)	12 (305mm)	**		1000001423	18 (457mm)
ELUHAD1316	16 (406mm)	18-1/2 (470mm)	13-1/2 (343mm)	16 (406mm)	**		1000001399	21 (533mm)
ELUHAD1414	16-1/2 (419mm)	16-1/2 (419mm)	14 (356mm)	14 (356mm)	**		1000001265	21 (533mm)
ELUHAD1418	16-1/2 (419mm)	20-1/2 (521mm)	14 (356mm)	18 (457mm)	**		1000001307	21 (533mm)
ELUHAD1616	18-1/2 (470mm)	18-1/2 (470mm)	16 (406mm)	16 (406mm)	**		1000001420	24 (610mm)
ELUHAD1916	21-1/2 (546mm)	18-1/2 (470mm)	19 (483mm)	16 (406mm)	**		1000001424	27 (686mm)
ELUHAD2115	23-1/2 (597mm)	18-1/4 (464mm)	21 (533mm)	15-3/4 (400mm)	**		1000001400	27 (686mm)
ELUHAD2816	30-1/2 (795mm)	18-1/2 (470mm)	28 (711mm)	16 (406mm)	**		1000001414	36 (914mm)

* Length is left to right. Width is front to back.

** Available in 4-1/2" (114mm), 5" (127mm) or 5-1/2" (140mm).

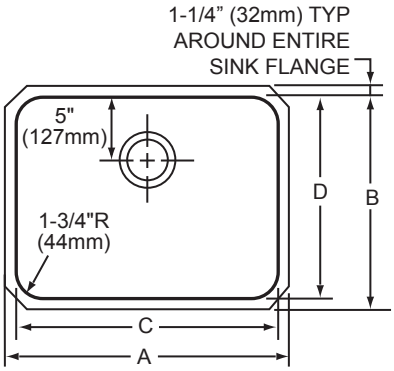

Installation Profile

1/8" (3mm) Overhang

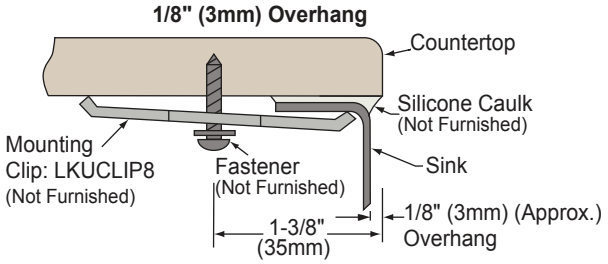

1/2" (13mm) Reveal

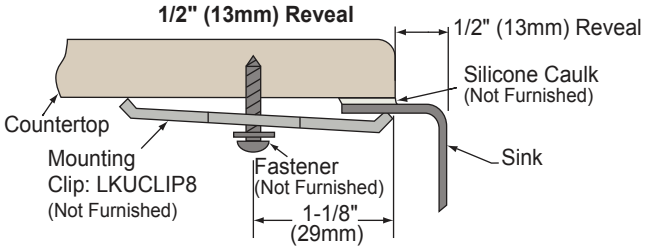

In keeping with our policy of continuing product improvement, Elkay reserves the right to change product specifications without notice. Please visit elkay.com for the most current version of Elkay product specification sheets.

This specification describes an Elkay product with design, quality, and functional benefits to the user. When making a comparison of other producers' offerings, be certain these features are not overlooked.

Elkay
elkay.com

2222 Camden Court
Oak Brook, IL 60523

© 2014 Elkay

CONCETTO
Single-lever sink mixer 1/2"
MODEL # 32665

Pure Freude an Wasser

GROHE

GROHE America, Inc | 200 North Gary Avenue, Suite G, Roselle, IL 60172
Phone: +1 (800) 444-7643 | Fax: +1 (800) 225-2778 | us-customerservice@grohe.com

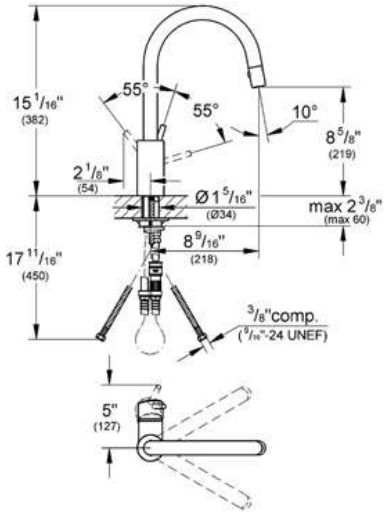

Product Description:
Single-lever sink mixer 1/2"

Standard Specification:
- **GROHE StarLight®** finish
- **GROHE SilkMove®** ceramic cartridge
- Single hole installation
- Swivel Spout
- Extractable integrated trigger spray
- Integrated non-return valve
- Stainless Steel Braided Flexible Supplies
- Quick installation system
- **Protected against backflow**
- Max Flow Rate 1.75 gpm (6.6 L/min)
- Variable Handle Positioning

Applicable Codes & Standards:
- Energy Policy Act of 1992
- NSF 61
- ASME A112.18.1/CSA B125.1
- US Federal and State material regulations
- ICC/ANSI A117.1
- CalGreen

Color:
- ❑ 32665 001 chrome
- ❑ 32665 DC1 supersteel

TOTO®

CST244EF

Entrada™ Close Coupled Toilet, 1.28GPF

FEATURES

- E-Max flushing system, high efficiency (1.28GPF/4.8LPF)
- Elongated bowl
- Universal Height
- ADA compliant
- Close coupled, elongated front bowl and tank set, less toilet seat
- Chrome trip lever
- 12" Rough-in

MODELS

- CST244EF

COMPONENTS

- C244EF - Elongated Front Bowl
- ST243E - Tank and Cover only

- SS114 SoftClose® seat (sold separately)

COLORS/FINISHES

- Standard
  #01 Cotton

PRODUCT SPECIFICATION

The two-piece, universal height, high efficiency E-Max flushing system toilet shall be 1.28GPF. Toilet shall have high-profile tank, elongated bowl and chrome trip lever. Toilet shall be ADA compliant and universal height. Toilet shall be TOTO Model CST244EF____.

E-MAX™ FLUSHING SYSTEM BY TOTO®

CODES/STANDARDS

- Meets and exceeds ASME A112.19.2/CSA B45.1
- Certifications: IAPMO(cUPC)
- Code compliance: UPC, IPC, NSPC, NPC Canada, and others
- ADA compliant (when installed with trip lever located on the approach side)

CST244EF

Entrada™ Close Coupled Toilet, 1.28GPF

SPECIFICATIONS

- Water Use — 1.28 GPF (4.8 LPF)
- Flush System — E-Max
- Min. Water Pressure — 8 psi (flowing)
- Water Surface — 8-3/8" x 10-1/2"
- Trap Diameter — 2-1/8"
- Rough-in — 12"
- Trap Seal — 2-3/8"
- Warranty — One Year Limited Warranty
- Material — Vitreous china
- Shipping Weight — C244EF - 53lbs
  ST243E - 24lbs
- Shipping Dimensions — C244EF - 28-1/2" x 16" W1 x 10-1/4" W2 x 17-3/4"

  ST243E - 16-1/2" x 8-1/4" x 15-3/4"

INSTALLATION NOTES

Back-to-Back Toilet Installations:
TOTO recommends the use of a nationally listed, double sanitary tee-wye only, in vertical waste stacks, in accordance with the stipulations noted in the majority of nationally recognized plumbing codes.

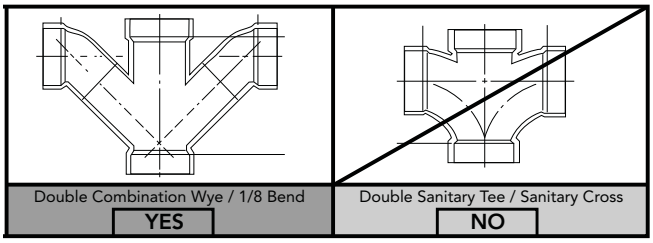

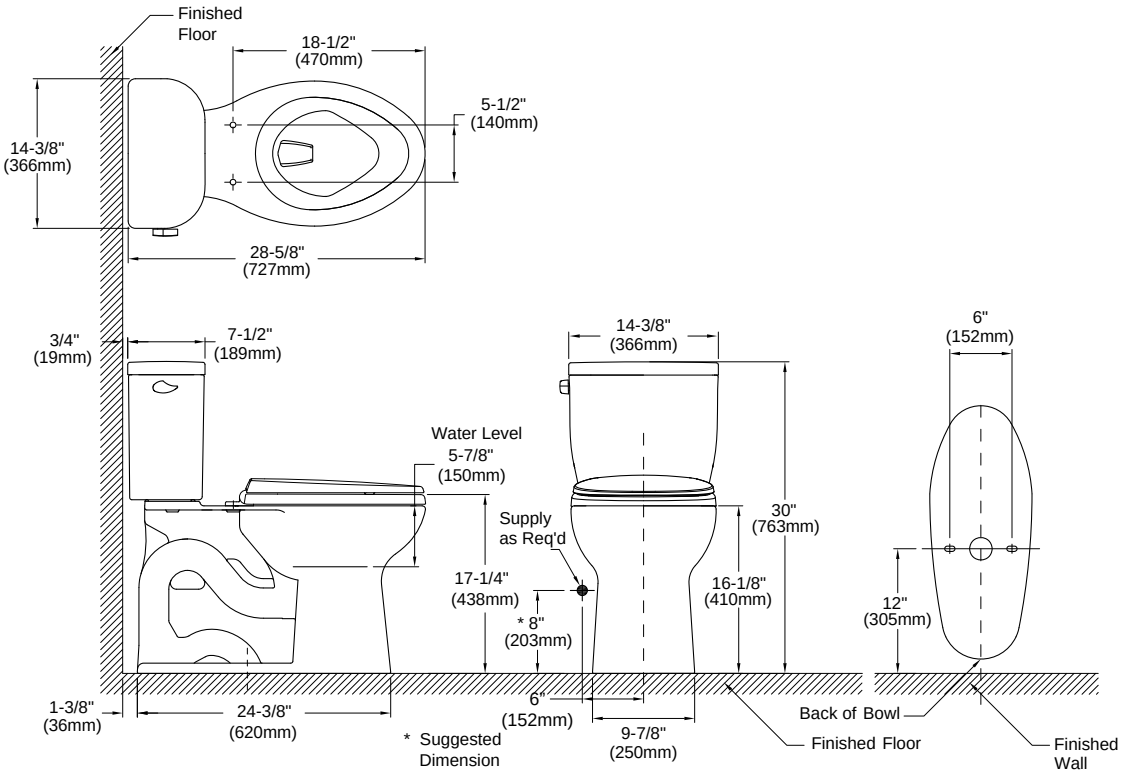

TOTO®

These dimensions and specifications are subject to change without notice

Ph: (888) 295-8134 | Fax: (800) 699-4889 | www.totousa.com

SS-00636 V.03

Printed in U.S.A. | © TOTO USA 02/13 | Printed on recycled paper ♻

COMMERCIAL HEAVY-DUTY PLASTIC TOILET SEAT

MODEL #	COLOR #
1955CT/1955SSCT	WHITE

DESCRIPTION:

Open front less cover, elongated, heavy-duty, injection molded solid plastic toilet seat. Features four molded-in bumpers, non self-sustaining (1955CT) or self-sustaining (1955SSCT) check hinges with non-corrosive 300 Series stainless steel posts and pintles and STA-TITE® Commercial Fastening System™. This seat complies with IAPMO/ANSI Z124.5-2013 Plastic Toilet Seats as a class Commercial Heavy Duty.

SPECIFICATIONS:

Size:	Elongated
Material:	Plastic
Style:	Open Front less Cover
Bumpers:	Four
Hinges:	Plastic Non Self-Sustaining (1955CT) or Self-Sustaining (1955SSCT) with 300 Series Stainless Steel Posts and Pintles
Fastening System:	STA-TITE® Commercial Fastening System™

PLASTIC HINGES WITH STAINLESS STEEL POSTS AND PINTLES

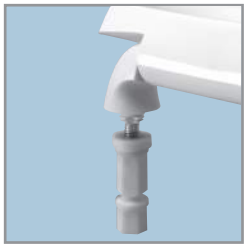

STA-TITE® COMMERCIAL FASTENING SYSTEM™

FEATURES:

STA-TITE® Commercial Fastening System™

Non-Corrosive 300 Series Stainless Steel Posts and Pintles

DIMENSIONS:

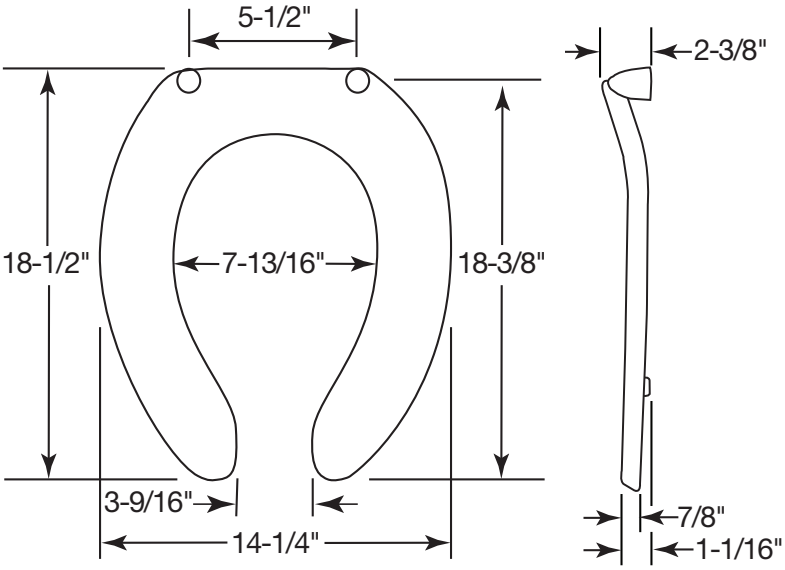

Proudly Made in the USA

Bemis Manufacturing Co., Sheboygan Falls, WI 53085
www.ToiletSeats.com

Phone: 800-558-7651 Fax: 800-292-3647

LENOVA™
EIGHT ELEMENTS OF SINKS

Stainless Steel

Stainless Steel
- PermaClean Sinks
- Zero Radius Collection
- One-Half Radius Collection
- Top Mount Sinks
- Entertainer Sink
- 16 Gauge Classic
- 18 Gauge Classic
- Steel Apron Collection
- Specialty Group
- Bath Collection
- Laundry Sink
- Ledge Sink

Porcelain
Bamboo
Copper
Bronze
Stone
Glass
Composite
Accessories
Solid Stainless Steel Faucets
FireClay Sink
Aqualogic

Show All Pages

Small Single Bowl Undermount

Small Single Bowl Undermount
PC-SS-0Ri-S15

Product Warranty Download | Product Specifications Download | DFX Files Download

Lenova Stock #	PC-SS-0Ri-S15
Mount Style	UM
Overall Dimensions	15 1/2 x 17 1/2
Bowl Dimensions	L: 14 x 16 x 10
Gauge	16
Weight (lbs)	25.00

Accessories, Grids & Cutting Boards
for Small Single Bowl Undermount PC-SS-0Ri-S15Related Product

Accessories

A-SP-05
Sink Drain A-SP-05

A-SP-01
Polished Chrome Finish

A-SP-03
Antique Bronze Finish

A-SP-04
Oil Rubbed Bronze Finish

A-SP-08
Sink Drain A-SP-08

A-SP-06
Sink Drain A-SP-06

GPCS15

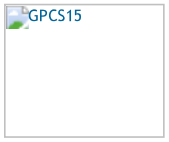

Lenova Sinks

4580 W Roosevelt Rd.
Hillside, IL 60162

Phone: 877-733-1098
Fax: 708-234-1351
Email: order@lenovasinks.com

LenovaSinks.com

Home
About Us
Contact Us
Products
Technical Data
Press Room
Rep Login
Newsletter Sign Up

The Eight Elements Of Sinks

Stainless Steel
Porcelain
Bamboo
Copper
Bronze
Stone
Glass
Composite
Specs & Accessories

CONCETTO
Single-lever sink mixer 1/2"
MODEL # 32665

Pure Freude an Wasser

GROHE

GROHE America, Inc | 200 North Gary Avenue, Suite G, Roselle, IL 60172
Phone: +1 (800) 444-7643 | Fax: +1 (800) 225-2778 | us-customerservice@grohe.com

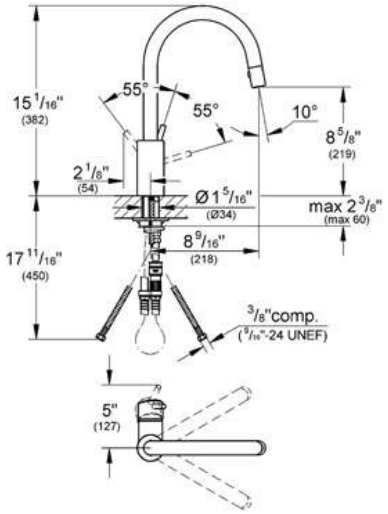

Product Description:
Single-lever sink mixer 1/2"

Standard Specification:
- **GROHE StarLight®** finish
- **GROHE SilkMove®** ceramic cartridge
- Single hole installation
- Swivel Spout
- Extractable integrated trigger spray
- Integrated non-return valve
- Stainless Steel Braided Flexible Supplies
- Quick installation system
- **Protected against backflow**
- Max Flow Rate 1.75 gpm (6.6 L/min)
- Variable Handle Positioning

Applicable Codes & Standards:
- Energy Policy Act of 1992
- NSF 61
- ASME A112.18.1/CSA B125.1
- US Federal and State material regulations
- ICC/ANSI A117.1
- CalGreen

Color:
- ❑ 32665 001 chrome
- ❑ 32665 DC1 supersteel